Available at Ironcompany.com®

INTIMIDATOR POWER RACK

INFLIGHT FITNESS

- ✓ 8' high with large 38" deep work area.
- ✓ Completely enclosed for optimal spotting capability.
- ✓ Fully welded side frames for strength and stability.
- ✓ Constructed of 2" x 4" 11 gauge flat oval tubes for modern styling and rugged durability.
- ✓ Up to 14 weight storage horns angled up for safety and easy use.
- ✓ 30 holes spaced 2" apart for maximum adjustability.
- ✓ Two welded upper band pegs standard.
- ✓ Two storage hooks for bands and chains.
- ✓ 1 ¼' standard solid steel safety arms extend 4" in front of frame for outside work.
- ✓ Five lower positions to attach band pegs.
- ✓ Heavy duty 3/8" thick bar holders.

Standard Configuration

**Note: Weight bar, weights, chain, straps and bench are not included*

8321 Standustrial Street, Stanton, CA 90680 · www.inflightfitness.com

INFLIGHT FITNESS

Note that weight plates, bars, straps and chains are not included.

Optional multi-grip chin-up bar

Rubber pads inside bar hangers and spotter arms help protect the finish

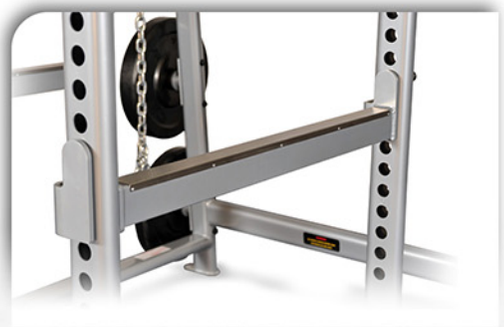

Optional stainless capped heavy duty spotter arms

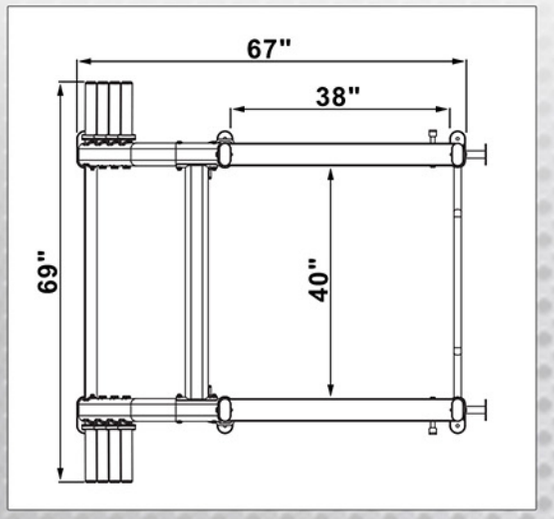

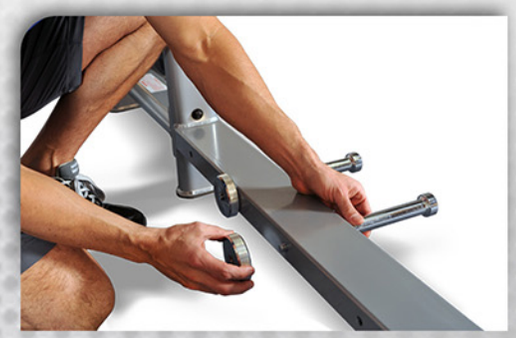

Easy to move optional band pegs

All power racks should be secured to the floor especially if strap training products are to be used.