Available at Ironcompany.com®

SPINNER® SPORT

OWNERS MANUAL

SPINNING®

CONTENTS

1 Welcome to the Spinning® Program

2 Spinning® Program Safety

4 Your Spinner® Bike

5 Caring for Your Spinner® Sport Bike

6 Bike Assembly

8 Testing the Bike

9 Troubleshooting

10 Lubricating the Chain

11 Chain Tension Adjustment

12 Warranty

© 2008 Mad Dogg Athletics, Inc. All rights reserved. Spin®, Spinning®, Spinner®, Spin Fitness® and the Spinning logo are registered trademarks of Mad Dogg Athletics, Inc.

WELCOME TO THE SPINNING® PROGRAM

Millions worldwide have lost weight, gained energy and gotten into the best shape of their lives with the help of the Spinning® program—and the Spinner® bike with accompanying DVDs give you everything you need to join them. Ready to get started? These guidelines give you the insight you need to change your body and your life.

» For more information on the Spinning program, Spinning gear and tips that will help you make the most of every ride visit, **www.spinning.com.**

SPINNING® PROGRAM SAFETY

- Consult your physician before beginning this or any other exercise routine. Not all exercise programs are suitable for everyone. Discontinue any exercise that causes you discomfort, and consult a medical expert.
- Ensure that adjustment knobs *(seat height, seat fore-and-aft, and handlebar height)* are properly secured and do not interfere with range of motion during exercise.
- Children under the age of 16 should not ride the Spinner® Sport bike.
- Do not insert any object, hands or feet into any openings, or expose hands, arms or feet to the drive mechanism or other potentially moving part of the bike.
- The body weight for individuals riding the Spinner Sport bike should not exceed 250 pounds.
- Spinner bikes have a weighted flywheel and a fixed gear. This means that in order to stop, you must gradually slow your pedal strokes rather than stopping abruptly. If you do need to stop immediately, push down on the RED resistance knob.
- After exercising, turn the resistance knob to increase resistance so the pedals will not rotate freely and potentially injure someone.
- If at any time you feel dizzy or have difficulty breathing, gradually stop pedaling and carefully dismount the bike.
- Listen to your body, ride at your own pace and set your bike's resistance at the level that feels right for you.
- Keep children and pets away from the bike whenever it's in use.

© 2008 Mad Dogg Athletics, Inc. All rights reserved.
Spin®, Spinning®, Spinner®, Spin Fitness® and the Spinning logo are registered trademarks of Mad Dogg Athletics, Inc.

- Never turn the pedal crank arms by hand.
- Stay hydrated. Drink water throughout your ride as needed.
- Only pedal without resistance during warm-up and cool-down.
- Stay in control by executing all movements and hand positions at a slow pace before attempting to increase your pedaling speed.
- Focus on form, posture and smooth transitions between movements.
- Do not use the bike without proper footwear. Never operate the bike with bare feet.
- Prevent your feet from coming out of the toe clip or shoe cage by keeping shoe laces tucked in and foot straps snug around your shoe. If your foot does become disengaged, push down on the resistance knob to stop the flywheel's motion.

YOUR SPINNER® BIKE

The patented Spinner bike is specially designed for the Spinning® program. The Spinner bike lets you change positions with ease and includes the following features to create an enjoyable, effective workout:

- A wide, padded seat to keep you comfortable and balanced. Adjust the seat horizontally and vertically to create a personalized fit.
- Adjustable handlebars featuring foam grips and a patented design that facilitates proper Spinning hand positions.
- An adjustable resistance knob to keep you in control of your ride. Simply twist the dial to add more or less resistance.
- A weighted flywheel to create a non-impact workout and facilitate a fluid pedal stroke.

Your Spinner bike uses a direct-drive fixed flywheel system that does not allow you to coast. To stop, decrease your speed gradually. **If you need to stop immediately, push down on the red resistance knob.**

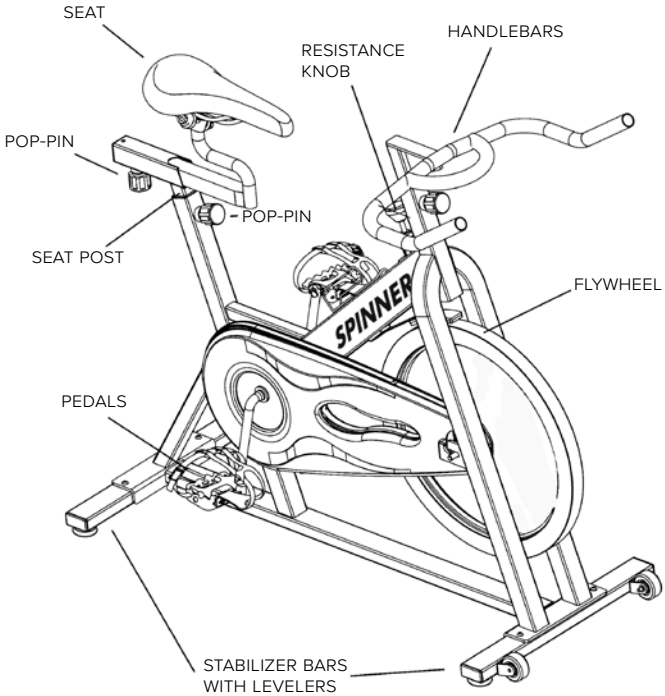

© 2008 Mad Dogg Athletics, Inc. All rights reserved.
Spin®, Spinning®, Spinner®, Spin Fitness® and the Spinning logo are registered trademarks of Mad Dogg Athletics, Inc.

CARING FOR YOUR SPINNER® SPORT BIKE

MOVING YOUR BIKE

Stand in front the bike, grasp the handlebars and tip the bike toward you until the transport wheels are touching the floor. Roll the bike to the desired location and then gently lower the rear of the bike back to the floor.

LEVELING YOUR BIKE

If you place your bike on an uneven surface, you may adjust how the bike sits by adjusting one or all of the four levelers located on the bottom of each corner of the bike.

ADJUSTING AND LEVELING YOUR SADDLE

If you experience saddle discomfort while riding or sitting on your bike, the angle can be adjusted by loosening the 14mm nuts located under the saddle. After making your adjustment, be sure to retighten the nuts before riding your bike.

PREVENTING RUST

After each use, raise handlebar and seat posts to the highest settings to expose moisture. Using an absorbent cloth, focus on all areas where perspiration can settle.

PROTECTING YOUR BIKE'S FINISH

After each ride, protect your bike's finish by wiping it down with a damp cloth. You may use bike cleaner such as SPINTECH® Fitness Equipment Polish, but do not use de-greasers. When cleaning your bike, be sure to keep your hands and fingers clear of a moving drivetrain.

PEDALS

Check pedals weekly to ensure that the threads are tightened. If the pedals have become loose, tighten threads with the wrench supplied to ensure they are securely attached.

WATER BOTTLE CAGES

Forcing oversized bottles into water bottle cages can damage cages. Checking and tightening the screws will help prevent damage.

BIKE ASSEMBLY

1) UNPACK THE CARTON

Open the shipping carton and remove all parts. Make sure the following parts are included and that no damage has occurred during shipping.

- Bike frame with flywheel
- Front stabilizer bar with transportation wheels
- Rear stabilizer bar
- Handlebars
- Pedals (set of two)
- Seat slider and seat
- Seat post
- Water bottle
- Tools: 1 allen wrench and 1 multi- wrench
- Owners Manual
- Guide to Ride
- Spinning® 4 DVD set

Take time now to enter your Spinner® bike serial number in the space below (serial number is located on the bottom crossbar). If parts are missing, or if you have any assembly questions, please contact customer service at 800-847-SPIN (7746).

Serial No. : _____

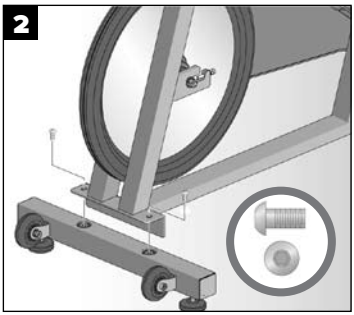

2) ATTACH THE STABILIZING BARS

Using the allen wrench supplied, remove the MDF boards (used to protect the bottom of the frame during shipping), by unscrewing and removing phillip head screws and washers. Lift the bike frame, remove MDF boards and discard boards, screws and washers. Remove button head screws and washers from the front stabilizer bar (with transportation wheels). Set screws and washers aside. Lift front of bike. Place the front stabilizer bar under the frame. Line up the holes in the stabilizer bar with the holes in the frame. Secure the front bar to the frame using the button head screws and washers. Tighten the screws securely. Repeat process for rear stabilizer bar.

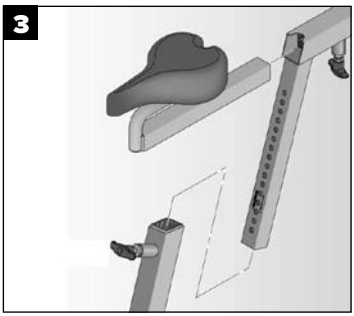

3) INSTALL THE SEAT

While holding the seat post pop-pin, slide the seat post into the seat tube. Release the pop-pin. Adjust the seat post to make sure the pop-pin is engaged. Tight the seat post pop-pin securely. Unscrew, pull out and hold the seat slider pop-pin. Slide the seat slider all the way into the seat tube. Release the seat slider pop-pin. Adjust the seat slider to make sure the pop-pin is engaged. Tight the seat slider pop-pin securely.

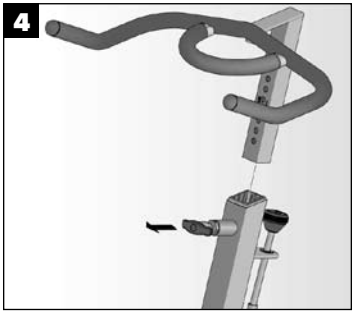

4) INSTALL THE HANDLEBARS

Unscrew, pull out and hold the handlebar pop-pin. Slide the handlebar post all the way into the handlebar tube. Release the handlebar pop-pin. Adjust the handlebars to make sure pop-pin is engaged. Tighten the handlebar pop-pin securely.

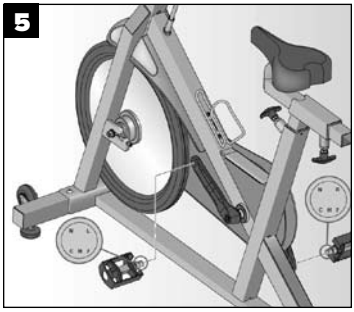

5) INSTALL THE PEDALS

NOTE: The pedal spindles are marked "L" (left) and "R" (right) to aid in assembly. Left and right are referenced from a seated position on the bike. Be sure to install the pedals on the correct side of the bike.
Turn the resistance knob all the way to the right until crank arms are immobilized. Install the left pedal on the left pedal crank. Use the multi wrench supplied and turn the left pedal spindle **counterclockwise** to tighten. Install the right pedal on the right pedal crank. Use the multi wrench supplied and turn the right pedal spindle **clockwise** to tighten. Be sure both pedals are tightened securely.

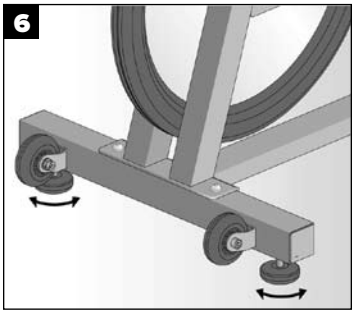

6) LEVEL THE BIKE

Move the bike to the location where it will be used. Your Spinner® Sport requires 4' x 6' of floor space for proper operation. Rock the bike gently to check for wobble. If needed, use the leveling adjusters under the front and rear stabilizer bars to steady the bike.

WARNING! SAVE THESE INSTRUCTIONS

THE FLYWHEEL MOMENTUM OF THE BIKE WILL KEEP THE PEDALS TURNING EVEN AFTER THE USER STOPS PEDALING OR IN THE EVENT THE USER'S FEET SLIP OFF THE PEDALS. DO NOT DISMOUNT THE BIKE OR ATTEMPT TO REMOVE YOUR FEET FROM THE PEDALS UNTIL BOTH THE PEDALS AND THE FLYWHEEL HAVE STOPPED COMPLETELY. FAILURE TO COMPLY MAY LEAD TO LOSS OF CONTROL AND SERIOUS PERSONAL INJURY.

TESTING THE BIKE

Use this checklist to perform the bike test procedure.

- Recheck all the bolts, and make sure they are all tightened and that no parts are missing.
- Test the handlebar and seat post to make sure they move freely and you are able to lock them at different positions.
- Check the seat to make sure it is level and tight, and does not rotate around or tilt. Tighten and adjust as needed.
- Test the seat slider for movement front to rear and check it by setting it at different settings.
- Brake tension is adjustable using the red resistance knob in the front of the bike. Pressing down on the knob will apply the brake if you need to stop quickly.
- Adjust seat post and handlebar post to your needs. Refer to *Guide to Ride* or **www.spinning.com**.
- Pedal at a moderate pace and test for proper and smooth resistance changes while varying the amount of turns on the resistance knob.
- To move the bike after testing is complete, stand in front the bike, grasp the handlebars and tip the bike toward you until the transport wheels are touching the floor. Roll the bike to the desired location and then gently lower the rear of the bike back to the floor. Adjust the leveling feet so that the bike is stable.

© 2008 Mad Dogg Athletics, Inc. All rights reserved.
Spin®, Spinning®, Spinner®, Spin Fitness® and the Spinning logo are registered trademarks of Mad Dogg Athletics, Inc.

WARNING! **SAVE THESE INSTRUCTIONS**

THE FLYWHEEL MOMENTUM OF THE BIKE WILL KEEP THE PEDALS TURNING EVEN AFTER THE USER STOPS PEDALING OR IN THE EVENT THE USER'S FEET SLIP OFF THE PEDALS. DO NOT DISMOUNT THE BIKE OR ATTEMPT TO REMOVE YOUR FEET FROM THE PEDALS UNTIL BOTH THE PEDALS AND THE FLYWHEEL HAVE STOPPED COMPLETELY. FAILURE TO COMPLY MAY LEAD TO LOSS OF CONTROL AND SERIOUS PERSONAL INJURY.

TROUBLESHOOTING

RATTLING HANDLEBARS OR SEAT TOWER

Make sure pop-pins are correctly locked into place.

SEAT PAIN

Check to ensure the seat is centered and level. Adjust as necessary. Bear in mind that it does take time for the body to adjust to the seat. A gel-padded seat cover and/or cycling shorts can make your ride more comfortable.

ROUGH, DRY FEELING WHEN INCREASING RESISTANCE

Put a few drops of oil underneath the resistance knob and let it run down to the resistance shaft thread barrel. This typically makes the motion of adjustment feel smoother.

LUBRICATING THE CHAIN

During heavy use of your Spinner® Sport, it may become necessary to lubricate your chain to reduce chain associated noises. If you have any questions regarding lubricating your chain, please contact customer service at **800-847-SPIN (7746)** for assistance.

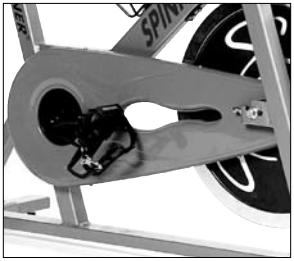

1) Locate the chain guard on the front right side of your Spinner Sport.

2) Using a phillips head screwdriver, remove the outer chain guard cover. This will expose the chain.

3) Use a chain lube such as SPINTECH® Silicone Fitness Lube or other oil-based lubricant with a spray nozzle. **Do not** use a wax-based lubricant.

4) When spraying the lubricant onto the chain, cover the floor under the bike and take care not to allow the lubricant to drip onto the floor.

5) Lock the brake by turning the resistance knob clockwise. With the brake locked up, spray the lube onto the chain. Loosen the brake and rotate the chain carefully and slowly, by hand, approximately a quarter turn. Then stop it, tighten the brake again and spray lube onto the next portion of the chain. Repeat the above steps a total of six times to lubricate the entire chain.

6) Carefully replace the chain guard. Your Spinner Sport is now ready for testing.

» **SPINTECH® lubricants, polish and grease are available at www.spinning.com.**

© 2008 Mad Dogg Athletics, Inc. All rights reserved.
Spin®, Spinning®, Spinner®, Spin Fitness® and the Spinning logo are registered trademarks of Mad Dogg Athletics, Inc.

CHAIN TENSION & ADJUSTMENT

The chain on your bike has been factory set and lubricated. It should not require adjustment initially. Over time, however, you may need to adjust the tension. If you have any questions regarding your chain tension, please contact customer service at **800-847-SPIN (7746)** for consultation prior to adjusting the tension of the chain.

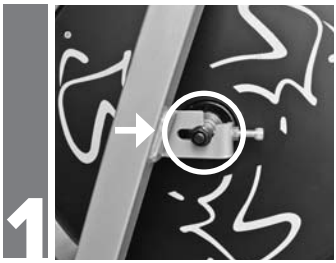

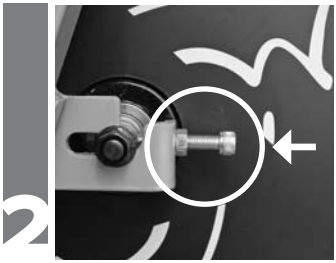

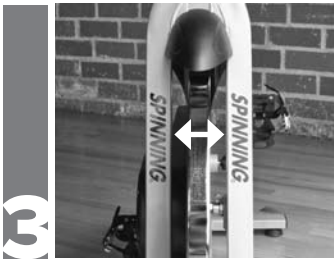

1) Using the 15mm socket and socket wrench, loosen the axle nuts on the left and right (fig. 1) of the flywheel.

2) To tighten the chain, turn the adjustment screw in a clockwise rotation equally on both sides using a 6 mm allen wrench (fig. 2).

3) While adjusting the chain tension, work on both sides of the flywheel. Adjust the angle of the flywheel so it is straight front to rear and evenly spaced within the frame side to side (fig. 3).

» If the chain is stretched beyond adjustment, the replacement of the chain is recommended. Please contact customer service at **800-847-SPIN (7746)** for more information.

4) Tighten the adjustment lock nuts and the axle nuts on both sides alternating from side to side. Replace the flywheel adjustment cover before operation.

WARNING! **SAVE THESE INSTRUCTIONS**

REMOVAL OF THE CHAIN GUARD IS STRONGLY DISCOURAGED AND SHOULD ONLY BE PERFORMED BY AN AUTHORIZED TECHNICIAN. FAILURE TO FOLLOW THESE INSTRUCTIONS MAY RESULT IN SEVERE INJURY.

Mad Dogg Athletics, Inc. Limited Warranty
Spinner® Sport

MAD DOGG ATHLETICS, INC. WARRANTS TO THE ORIGINAL PURCHASER THAT THE SPINNER SPORT WILL BE FREE FROM DEFECTS IN WORKMANSHIP AND MATERIALS. ALL OTHER SPINNER SPORT PARTS ARE COVERED FOR ONE (1) YEAR FROM THE DATE OF PURCHASE (SEE LIMITATIONS AND EXCLUSIONS BELOW). THIS WARRANTY DOES NOT COVER LABOR CHARGES ASSOCIATED WITH REPLACING COVERED COMPONENTS. PARTS REPLACED UNDER THE TERMS OF THIS WARRANTY WILL BE WARRANTED FOR THE REMAINDER OF THE ORIGINAL WARRANTY PERIOD ONLY. THIS WARRANTY BECOMES EFFECTIVE UPON THE INVOICE DATE OF THE ORIGINAL PURCHASE.

TO ORDER REPLACEMENT PART(S), THE ORIGINAL PURCHASER MAY CONTACT MAD DOGG ATHLETICS, INC. PRODUCT SUPPORT AT 800-847-SPIN. PROOF OF PURCHASE OR WARRANTY REGISTRATION MAY BE NEEDED IN ORDER FOR MAD DOGG ATHLETICS, INC. TO VERIFY WARRANTY COVERAGE AND ISSUE A RETURN MATERIALS AUTHORIZATION (RMA) NUMBER. PARTS BEING RETURNED TO MAD DOGG ATHLETICS, INC. FOR WARRANTY CREDIT MUST BE SHIPPED PREPAID, ACCOMPANIED BY A PACKING LIST OR TAG BEARING THE RMA NUMBER, AND CUSTOMER NAME. NO CREDIT WILL BE ISSUED FOR PARTS RETURNED WITHOUT PRIOR AUTHORIZATION FROM MAD DOGG ATHLETICS, INC.

MAD DOGG ATHLETICS, INC. RESERVES THE RIGHT TO REVIEW DEFECTIVE PART(S). ALL COSTS OF SHIPPING DEFECTIVE PART(S) TO AND FROM MAD DOGG ATHLETICS, INC. FOR INSPECTION SHALL BE BORNE SOLELY BY THE ORIGINAL PURCHASER. ANY REPAIR OR MODIFICATION OF DEFECTIVE PART(S) BY ANYONE OTHER THAN A MAD DOGG ATHLETICS, INC. TECHNICAL REPRESENTATIVE OR AUTHORIZED SERVICE PROVIDER WILL VOID THIS WARRANTY. IF MAD DOGG ATHLETICS, INC. DETERMINES, IN ITS SOLE DISCRETION, THAT IT IS IMPRACTICAL TO SHIP DEFECTIVE PART(S) TO MAD DOGG ATHLETICS, INC., MAD DOGG ATHLETICS, INC. MAY DESIGNATE, IN ITS SOLE DISCRETION, A REPAIR FACILITY TO INSPECT AND ESTIMATE THE COST TO REPAIR SUCH DEFECTIVE PART(S). THE COST, IF ANY, OF SHIPPING DEFECTIVE PART(S) TO AND FROM SUCH REPAIR FACILITY AND OF SUCH ESTIMATE SHALL BE BORNE SOLELY BY THE ORIGINAL PURCHASER. DEFECTIVE PART(S) MUST REMAIN AVAILABLE FOR INSPECTION UNTIL THE CLAIM IS FINALIZED. WHENEVER CLAIMS ARE SETTLED, MAD DOGG ATHLETICS, INC. RESERVES THE RIGHT TO BE SUBROGATED UNDER ANY EXISTING INSURANCE POLICIES THE CLAIMANT MAY HAVE.

Limitations and Exclusions

THIS LIMITED WARRANTY DOES NOT APPLY TO COSMETIC DAMAGE, IMPERFECTIONS THAT ARE WITHIN DESIGN SPECIFICATION(S) OR THAT DO NOT MATERIALLY ALTER FUNCTIONALITY, OR DAMAGE DUE TO ACTS OF GOD, ACCIDENT, ABUSE, MISUSE, NEGLIGENCE, LACK OF NORMAL MAINTENANCE, ABNORMAL SERVICE OR HANDLING THAT DIFFERS FROM THAT SPECIFIED FOR THIS MODEL, IMPROPER INSTALLATION OR OPERATION. IN ADDITION, ALTERATION OR MODIFICATION OF THE PRODUCT, OR REPAIR BY ANYONE OTHER THAN A MAD DOGG ATHLETICS, INC. TECHNICAL REPRESENTATIVE OR AUTHORIZED SERVICE PROVIDER WILL VOID THIS WARRANTY. THIS WARRANTY IS VALID ONLY IN THE CONTINENTAL UNITED STATES.

Disclaimer of Warranties; Limitation of Liability

THIS WARRANTY IS IN LIEU OF ALL OTHER WARRANTIES, EXPRESS OR IMPLIED, INCLUDING WITHOUT LIMITATION, THE IMPLIED WARRANTIES OF MERCHANTABILITY AND FITNESS FOR A PARTICULAR PURPOSE. REPAIR OR REPLACEMENT AS PROVIDED ABOVE SHALL BE THE SOLE AND EXCLUSIVE REMEDY AVAILABLE TO THE PURCHASER. CORRECTION OF DEFECTS, IN THE MANNER AND FOR THE PERIOD OF TIME DESCRIBED ABOVE, SHALL CONSTITUTE COMPLETE FULFILLMENT OF ALL LIABILITIES AND RESPONSIBILITIES OF MAD DOGG ATHLETICS, INC. TO THE PURCHASER WITH RESPECT TO CONTRACT, NEGLIGENCE, STRICT LIABILITY OR OTHERWISE. MAD DOGG ATHLETICS, INC. SHALL NOT BE LIABLE OR IN ANY WAY RESPONSIBLE FOR ANY INCIDENTAL OR CONSEQUENTIAL DAMAGES BASED UPON BREACH OF ANY EXPRESS OR IMPLIED WARRANTY ON THIS PRODUCT OR OTHERWISE.

SOME STATES DO NOT ALLOW THE EXCLUSION OR LIMITATION OF IMPLIED WARRANTIES OR INCIDENTAL OR CONSEQUENTIAL DAMAGES, SO THE ABOVE EXCLUSIONS AND LIMITATIONS MAY NOT APPLY TO YOU. THIS WARRANTY GIVES YOU SPECIFIC LEGAL RIGHTS, AND YOU MAY ALSO HAVE OTHER RIGHTS WHICH MAY VARY FROM STATE TO STATE.

The Spinner Sport is **not** for commercial use and is warranted for home use only.

Covered by one or more U.S. Patent No. 5,423,728; 5,722,916; 6,155,958; 6,468,185; 6,881,178, U.S. Patent Pending.

© 2008 Mad Dogg Athletics, Inc. All rights reserved.
Spin®, Spinning®, Spinner®, Spin Fitness® and the Spinning logo are registered trademarks of Mad Dogg Athletics, Inc.

Mad Dogg Athletics, Inc.
2111 Narcissus Court
Venice, California 90291
Tel: 800-847-SPIN (7746)
www.spinfitness.com

© 2008 Mad Dogg Athletics, Inc. All rights reserved.
Spin®, Spinning®, Spinner®, Spin Fitness® and the Spinning logo are registered trademarks of Mad Dogg Athletics, Inc.