Available At IRON COMPANY

SPIRIT COMMERCIAL

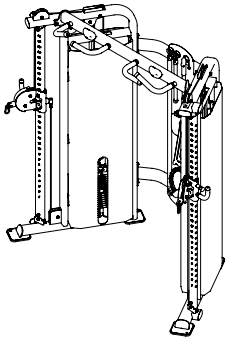

ST800FT FUNCTIONAL TRAINER

OWNER'S MANUAL

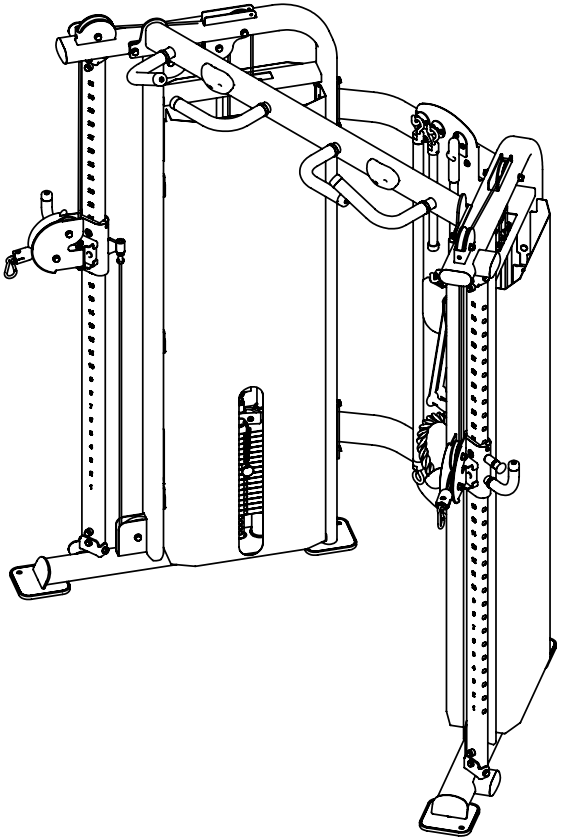

TABLE OF CONTENTS

3 PRODUCT REGISTRATION

4 IMPORTANT SAFETY INSTRUCTIONS

9 ASSEMBLY INSTRUCTIONS

24 HEAVY WEIGHT STACK

26 RESISTANCE TRAINING BENEFITS AND TIPS

27 GENERAL MAINTENANCE

31 MANUFACTURER'S LIMITED WARRANTY

Thank you for purchasing our product, please save these instructions. Please do not perform or attempt any customizing, adjustments, repair or maintenance that is not described in this manual.

Congratulations on your new ST800FT Functional Trainer and welcome to the Spirit Fitness family!

Thank you for your purchase of this quality ST800FT Functional Trainer from Spirit Fitness. Your new ST800FT Functional Trainer was manufactured by one of the leading fitness manufacturers in the world and is backed by one of the most comprehensive warranties available. Through your dealer, Spirit Fitness will do all we can to make your ownership experience as pleasant as possible for many years to come. If not purchased direct from Spirit Fitness, the local dealership where you purchased this Functional Trainer is your administrator for all Spirit Fitness warranty and service needs. Their responsibility is to provide you with the technical knowledge and service personnel to make your experience more informed and any difficulties easier to remedy.

Please take a moment at this time to record the name of the dealer, their telephone number, and the date of purchase below to make any future, needed contact easy. We appreciate your support and we will always remember that you are the reason that we are in business.

Yours in Health,
Spirit Fitness

NAME OF DEALER _____

DEALER PHONE # _____

PURCHASE DATE _____

RECORD YOUR SERIAL NUMBER

Please record the serial number of this fitness product in the space provided below. The serial number is located at the base of the Functional Trainer.

SERIAL NUMBER: _____

REGISTER YOUR PURCHASE

The self-addressed product registration card must be completed in full and returned to Spirit Fitness. You can also go to www.spiritfitness.com/warranty under the Support tab to register online.

⚠WARNING

This product can expose you to chemicals including Toluene and Acrylamide which are known to the State of California to cause Cancer and birth defects or other reproductive harm. For more information, go to www.P65Warnings.ca.gov

IMPORTANT SAFETY INSTRUCTIONS

Read the Owner's Manual carefully before assembling, servicing or using the equipment. It is the responsibility of the facility owner and/or owner of the equipment to instruct users on proper operation of the equipment and review all labels.

WARNING: Serious injury could occur if these safety precautions are not observed:

USER SAFETY PRECAUTIONS

- Obtain a medical exam before beginning any exercise program.
- Stop exercising if feeling faint, dizzy or experiencing pain and consult your physician.
- Obtain instructions before using.
- Read and understand the owner's manual and all warnings posted on the machine before using.
- Keep all children (12 and under) away. Teenagers (13 and over) and disabled must be supervised.
- Keep body and clothing free from and clear of all moving parts.
- Use the machine only for the intended use. DO NOT modify the machine.
- Inspect machine prior to use. DO NOT use if it appears damaged or inoperable.
- Inspect all cables and connections prior to use. DO NOT use if any components are worn, frayed or damaged.
- DO NOT attempt to fix a broken or jammed machine. Notify floor staff.
- DO NOT use if guards are missing or damaged.
- Be sure that the weight pin is completely inserted. Use only the pin provided by the manufacturer. If unsure seek assistance.
- Never pin the weights in an elevated position. DO NOT use this machine if found in this condition. Seek assistance from floor staff.
- DO NOT use dumbbells or other incremental weights, except those provided by the manufacturer.
- Report any malfunctions, damage or repairs to the facility.
- Replace any warning labels if damaged, worn or illegible.
- DO NOT use use this machine outdoors.

FACILITY SAFETY PRECAUTIONS

- Read the Owner's Manual carefully before assembling, servicing or using the equipment.
- In residential (home) usage where rocking, tipping, or falling over due to incorrect usage and misuse is not a possibility, equipment does not need to be anchored to floor.
- In facilities (unsupervised settings such as hotels, apartment gyms, etc), Spirit Fitness strongly recommends that to eliminate rocking, tipping or falling over due to incorrect usage and misuse, equipment be secured to a solid, level surface.
  NOTE: Spirit Fitness is not responsible for the actual anchoring of equipment. Consult with a professional contractor.
  NOTE: Use fasteners having a minimum of 500 lbs. tensile capacity (3/8" grade 2 bolts or better).
  NOTE: If legs/frame does not contact surface, DO NOT pull down with anchors. Shim any leg or frame not in contact with surface using flat washers.
- Make sure that each machine is set up and operated on a solid level surface. Do not install equipment on an uneven surface.
- Make sure that all users are properly trained on how to use the equipment.
- Make sure there is enough room for safe access and operation of the equipment.
- Perform regular maintenance checks on the equipment. Also pay close attention to all areas most susceptible to wear, including (but not limited to) cables, pulleys, belts and grips.
- Immediately replace worn or damaged components. If unable to immediately replace worn or damaged components then remove from service until the repair is made.
- Use only Spirit Fitness supplied components to maintain/repair the equipment.
- Keep a repair log of all maintenance activities.
- Inspect all cables and belts and connections prior to use. DO NOT use if any components are worn, frayed or damaged.

NOTE: It is the sole responsibility of the user/owner or facility operator to ensure that regular maintenance is performed.

SAFETY GUIDELINES AND PRACTICES

Spirit Fitness recommends that all fitness equipment be used in a supervised area. It is recommended that the equipment be located in an access controlled area. Control is the responsibility of the owner. The extent of control is at the discretion of the owner.

It is the responsibility of the purchaser/user of Spirit Fitness products to read and understand the owner's manual, and warning labels; as well as instruct all individuals, whether end users or supervising personnel, on proper usage of the equipment.

PROPER USAGE

Use machine only as described in the manual. Failing to follow proper instructions may result in injury.

- Do not lean against or pull on the framework or any component, whether machine is at rest or in use. Inappropriate or improper use may result in injury to users or third parties (bystanders).
- Do not use machine if it is not located on a solid level surface or is improperly installed.
- Provide an adequate safety perimeter between the machine, walls and other equipment to ensure that the facility has the proper clearance for usage and training.

SECURING EQUIPMENT

The machine has holes in the feet, which allow for ease in anchoring to the floor. Spirit Fitness strongly recommends that to eliminate rocking, tipping or falling over due to incorrect usage and misuse, equipment be secured to a solid, level surface.

- The solid, level surface should not deviate more than 1/8" over a 10' distance or as defined and required by local building and architectural codes.
- Anchoring of equipment must be completed by a qualified licensed contractor.
- Anchoring holes are provided on the feet of the frame. All anchoring locations must be used when anchoring the equipment to the floor.
- Due to the wide variation of flooring on which machines may be anchored or installed, verify anchoring method and anchoring fasteners with a qualified and licensed contractor.
- A minimum pull out force of 220 lbs/100 kgs is required for each anchor position.
- Do not use machine until it is properly anchored.

MAINTENANCE

Preventative maintenance allows proper equipment operation and reduces the risk of injury. Perform the maintenance requirements as specified in the manual (see table on page 27).

STANDARD COMPLIANCE

Spirit Fitness products meet or exceed applicable ASTM and EN Standards.

WARNING/CAUTION DECALS

- Warning decals indicate a potentially hazardous situation, which, if not avoided, could result in death or serious injury.
- Caution decals indicate a potentially hazardous situation, which, if not avoided, could result in minor or moderate injury.

SAVE THESE INSTRUCTIONS - THINK SAFETY!

SPIRIT COMMERCIAL

ST800FT ASSEMBLY INSTRUCTIONS

ST800FT PRE-ASSEMBLY

To avoid possible damage to this ST800FT Functional Trainer, please follow these assembly steps in the correct order. Be sure to read your Assembly/Owner's Guide before using your new ST800FT Functional Trainer.

Please use the various lists in this manual to account for all parts included in the assembly. If replacement parts are needed, use the part number and the description from the lists. Use only our replacements when servicing. Failure to do so will void your warranty and could result in personal injury.

After assembly, check all operations for ease of use. If any problems are experienced, first recheck the assembly instructions for possible errors made. If more help is needed, call your authorized dealer. Be sure to have your serial number ready.

NOTE: During assembly, it is recommended to ensure that all bolts are in place and partially threaded before completely tightening any one bolt.

UNPACKING

1. Cut the straps, then pull the staples away from the bottom half and lift the top half of the carton off of the bottom
2. The hardware is located in the holes of the associated tubes/brackets

ST800FT TOOLS REQUIRED / HARDWARE GUIDE

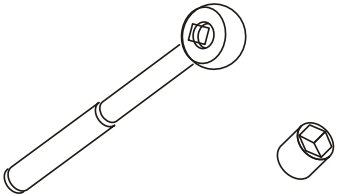

RATCHET WRENCH AND SOCKET

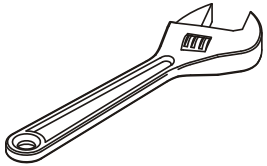

ADJUSTABLE WRENCH

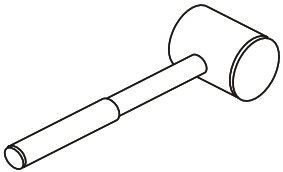

RUBBER MALLET

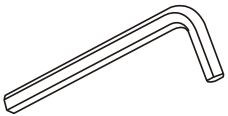

HEX KEY WRENCH SET

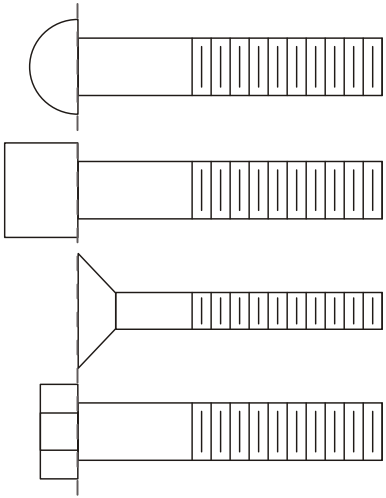

Button Head Cap Screw

Socket Head Cap Screw

Flat Head Cap Screw

Hex Head Bolt

ST800FT PARTS LIST

Item No.	Description	QTY
1	Left Stand	1
2	Right Stand	1
3	Left Guide Bar	1
4	Right Guide Bar	1
5	Left Slip Frame	1
6	Right Slip Frame	1
7	Cross Brace	2
8	Transverse Beam	1
9	Dual Pulley Bracket	2
10	Guide Bar	4
11	Hand Board	1
12	Pop Pin	2
13	Support Frame	4
14	Pulley Connecting Frame	2
15	Fixing Rack	1
16	Hook Fixing Rack	6
17	Inner Shroud	2
18	Outer Shroud	2
19	Long Handle	1
20	Short Pull Handle Assembly	1
21	Short Handle	1
22	Lat Strap	2
23	Triceps Rope	1
24	Foot Lat Strap	1
25	Shaft For Pulley Bracket	2
26	Cable Assembly	2
27	Plastic Tube Guide	4
28	Big Pulley	6
29	Small Pulley	10
30	Rock Climbing	2
31	Grip	2
32	Gloves	3
33	Gloves	2
34	L Hook Sleeve	7
35	Aluminum Cap φ32	4
36	Aluminum Ring φ32	4
37	Aluminum Cap φ25	2
38	Aluminum Ring φ25	2
39	Spacer	4
40	Plug	6
41	Plug	4

ST800FT PARTS LIST

42	Foot Cove	4
43	Shield Permanent Seat	12
44	Bumper	2
45	Mount Sleeve	4
46	Weight Bumper	4
47	Nylon Bumper	4
48	Nylon Spacer	4
49	Six Angle Flange Nut M12	4
50	Gourd Hook φ8	2
51	Weight Plate	30
52	Top Plate	2
53	Selector Pin w/Coil	2
54	Rubber Pedestal	2
55	Hex Bolts M10*115	2
56	Hex Bolts M10*95	4
57	Hex Bolts M10*55	4
58	Hex Bolts M10*50	18
59	Hex Bolts M10*25	12
60	Hex Bolts M8*95	2
61	Socket Head Cap Bolts M10 x 30	2
62	Socket Head Cap Bolts M8 x 30	4

63	Socket Head Cap Bolts M4 x 20	2
64	Button Head Cap Screw M10 x 20	4
65	Button Head Cap Screw M8 x 16	14
66	Button Head Cap Screw M6 x 12	4
67	Flat Head Cap Screw M6 x 15	6
68	Screw M5*20	24
69	Socket Set Screw M5 x 3	12
70	Nylon Lock Nut M10	28
71	Nylon Lock Nut M8	16
72	Nylon Lock Nut M6	4
73	Hex Thin Nut M6	12
74	Spring Washer φ10	4
75	Arc Washers φ10.5 x φ21 x 1.8	4
76	Washer φ11 x φ20 x 2	68
77	Washer φ9 x φ16 x 1.5	36

ST800FT EXPLODED VIEW

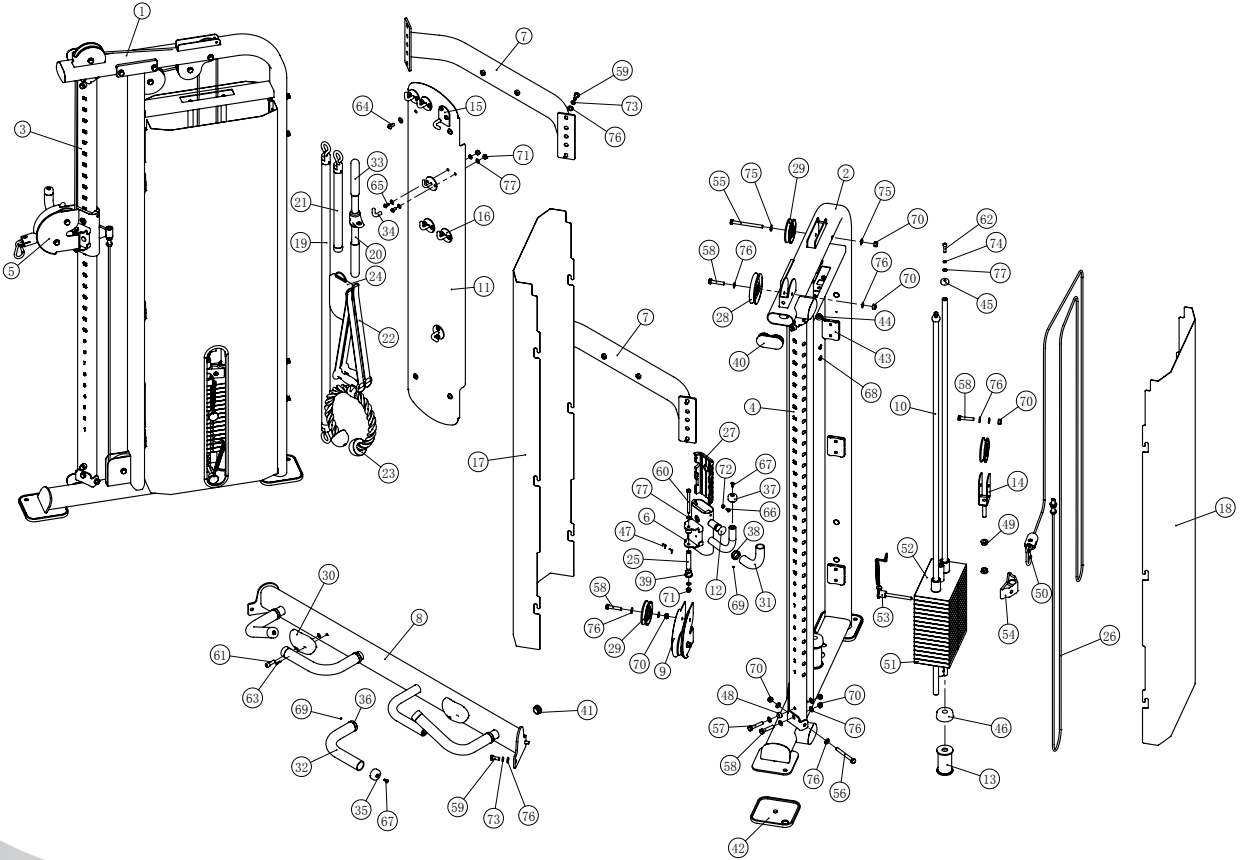

ST800FT ASSEMBLY INSTRUCTIONS

Assembly of the equipment takes professional installers aproximately 2 hours. If this is the first time you have assembled this type of equipment, plan to spend more time. It is highly recommended to use professional installers to assemble the equipment. You may find it quicker, safer, easier to assemble with the assistance of another person as some components of the unit are large and heavy.

It is important that you assemble your product in a clean, clear, uncluttered area. This will enable you to move around the product whilst you are fitting components and reduce the possibility of injury during assembly.

Note:
As with any assembled part, proper alignment is critical. While tightening the fasteners, be sure to leave room for adjustments. Do not fully tighten the fasteners until instructed to do so. Be cafeful to assemble the components in the sequence presented in this manua.

ST800FT STEP ONE

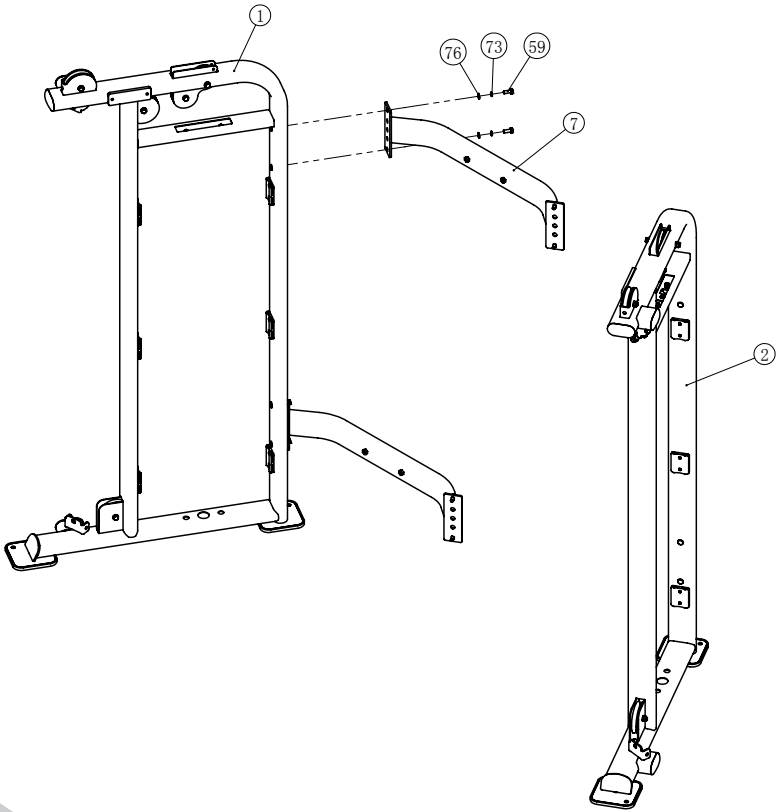

Connect the **Right Stand (No. 2)** to the **Left Stand (No. 1)** using the two **Cross Braces (No. 7)**.

Secure with:

4 **M10 x 25 Hex Head Bolts (No. 59)**

4 **Spring Washers φ 10 (No. 73)**

4 **Washers φ11 x φ20 x 2 (No. 76)**

Note: Hand Tighten the Bolts

ST800FT STEP TWO

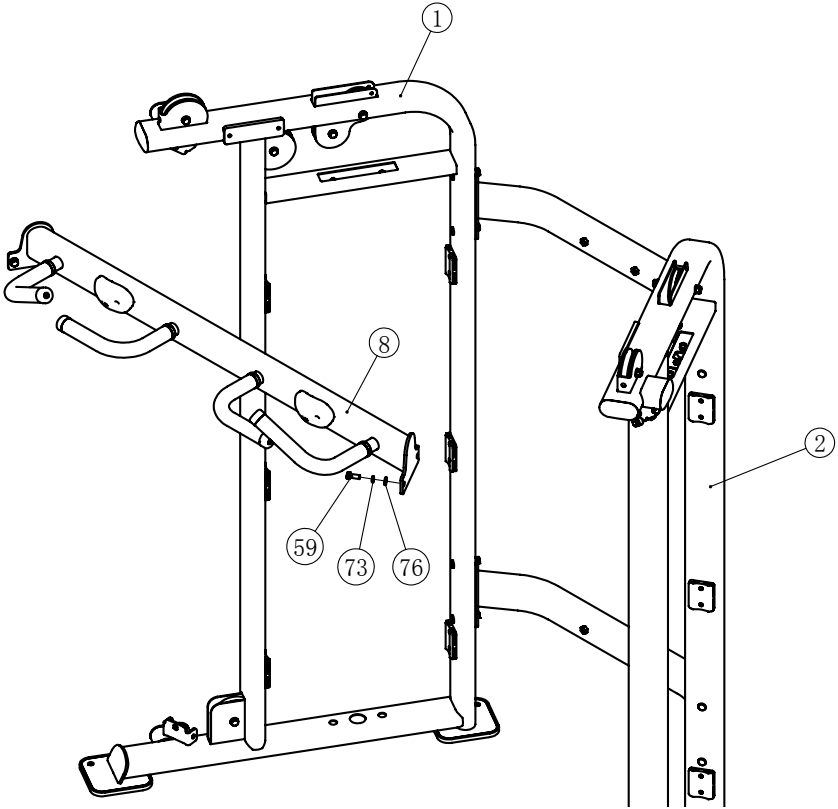

1. Attach the **Transverse Beam (No. 8)** to the **Right Stand (No. 2)** and the **Left Stand (No. 1)**.

Secure with:

4 **M10 x 25 Hex Head Bolts (No. 59)**
4 **Spring Washers φ 10 (No. 73)**
4 **Washers φ11 x φ20 x 2 (No. 76)**

Note: Hand Tighten the Bolts

ST800FT STEP THREE

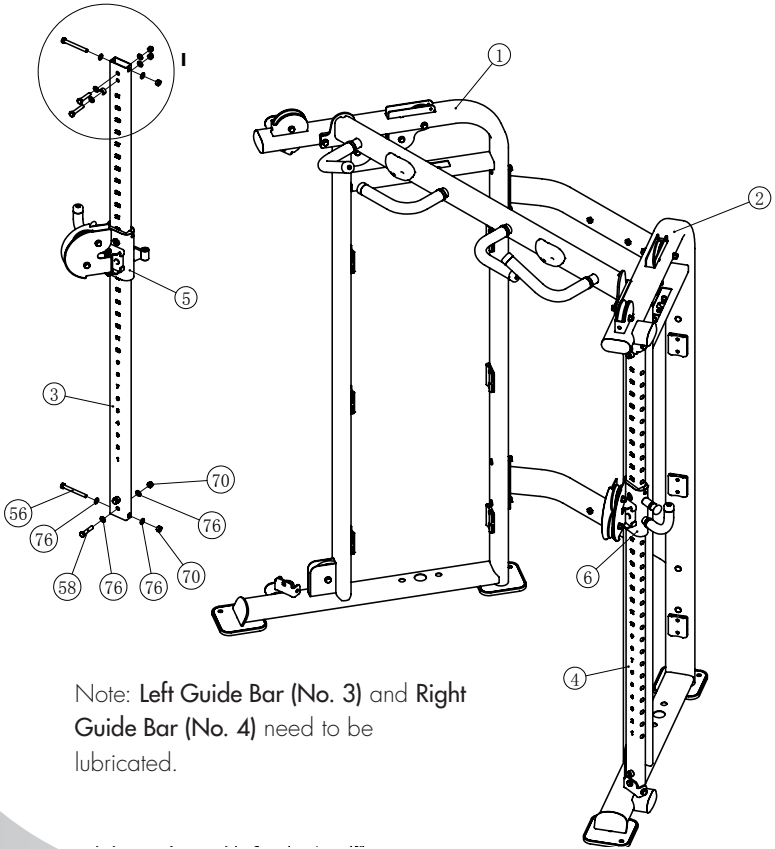

Note: **Left Guide Bar (No. 3)** and **Right Guide Bar (No. 4)** need to be lubricated.

1. Slide the **Left Slip Frame (No. 5)** onto the **Left Guide Bar (No. 3).**

1a. Repeat with the **Right Slip Frame (No. 6)** onto the **Right Guide Bar (No. 4).**

2. Attach the **Left Guide Bar (No. 3)** onto the **Left Stand (No. 1).**

Secure with:

2 **M10 x 95 Hex Head Bolts (No. 56)**
2 **M10 x 50 Hex Head Bolts (No. 58)**
4 **Nylon Lock Nuts M10 (No. 70)**
8 **Washers φ11 x φ20 x 2 (No. 76)**

2a. Repeat with the **Right Guide Bar (No. 4)** onto the **Right Stand (No. 2).**

Note: Wrench Tighten Bolts

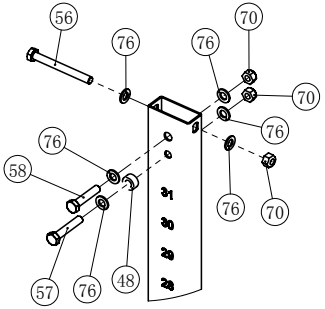

ST800FT STEP FOUR

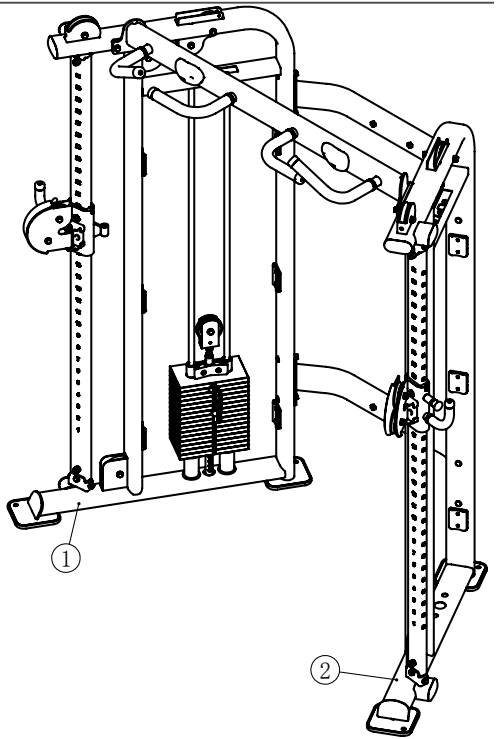

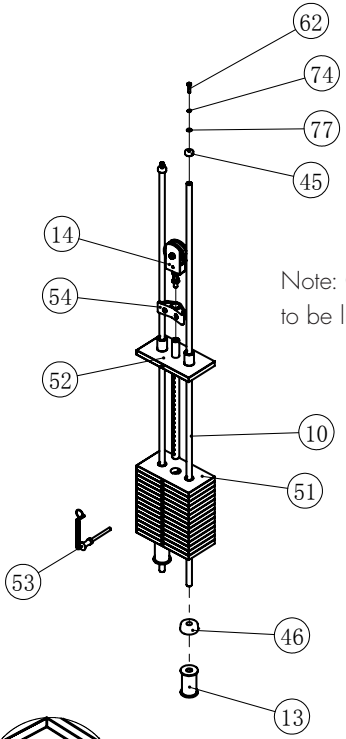

Note: **Guide Bar (No. 10)** need to be lubricated.

ST800FT STEP FOUR

1. Slide the 2 **Guide Bars (No. 10)** into the holes at the base. Allow the Guide Bars to lean inward together toward the center of the machine - this will allow you to more easily slide on the necessary parts during this assembly step.
2. Slide the 2 **Support Frames (No. 13)** onto the 2 **Guide Bars (No. 10)** first, then slide the 2 **Weight Bumpers (No. 46)** on top of them. The two **Support Frames (No. 13)** and the two **Weight Bumpers (No. 46)** will support the weight stack.
   Note: If additional 50lbs of plates are purchased to increase the weight from 160lbs to 210lbs on each weight stack, then these two **Support Frames** will be removed - see diagram at end of assembly steps for more info.
3. Slide 15 **Weight Plates (No. 51)** onto the 2 **Guide Bars (No. 10),** then slide on the **Top Plate (No. 52)**.
4. Tilt the 2 **Guide Bars (No. 10)** back to a vertical position (pointing straight up) and secure the 2 **Guide Bars (No. 10)** to the frame at the top using:
   2 **Mount Sleeves (No. 45)**
   2 **Washers φ9*φ16*1.6 (No. 77)**
   2 **Spring Washers φ8 (No. 74)**
   2 **M8*25 SHCS (No. 62)**
5. Attach the **Rubber Pedestal (No. 54)**, then the **Pulley Connecting Frame (No. 14)** to the **Top Plate (No. 52)**. Then attach the **Selector Pin with Coil (No. 53)** to the bolt portion of the **Pulley Connecting Frame (No. 14)**.

Wrench Tighten Screws.

ST800FT STEP FIVE

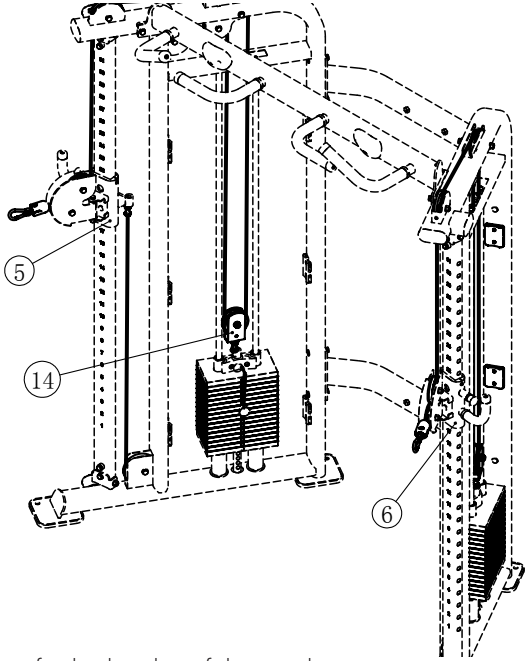

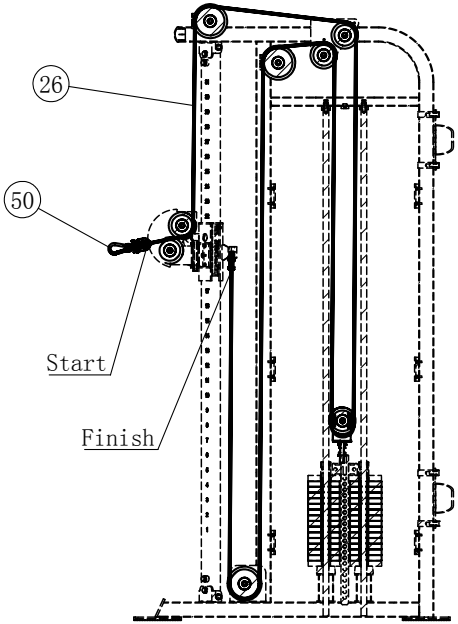

Repeat this step for both sides of the machine.
Follow the diagram with the **Cable Assembly (No. 26)** through the framework as shown. Pay special attention to make sure the cable end with the bolt is connected at the "Finish" and the cable end with the loop is positioned at the "Start" as shown in the diagram.

Wrench Tighten Bolts and Nylon Lock nuts

ST800FT STEP SIX

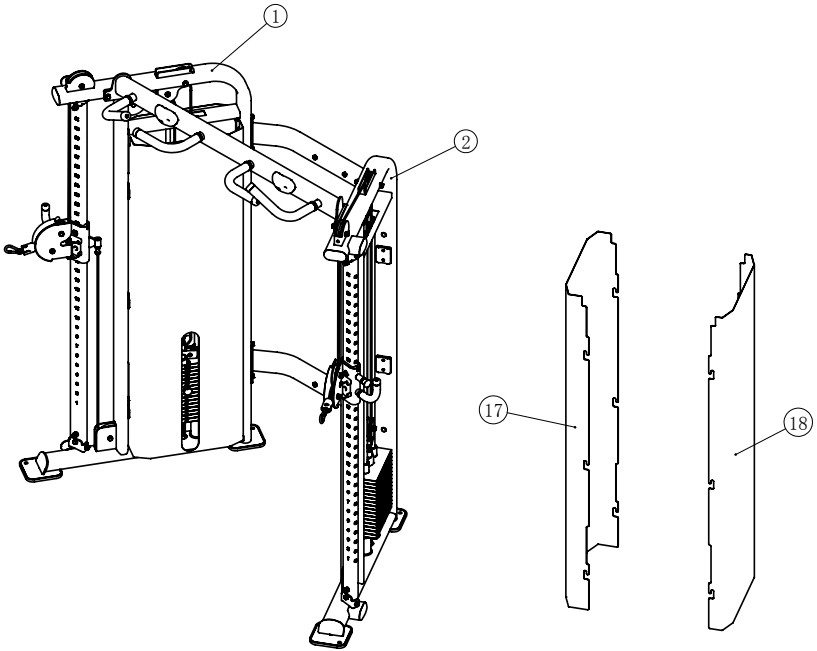

1. Hook the **Inner Shroud (No. 17)** enclosing the **Left Stand (No. 1)** along with the **Outer Shroud (No. 18)**.

2. Repeat on the **Right Stand (No. 2)**.

ST800FT STEP SEVEN

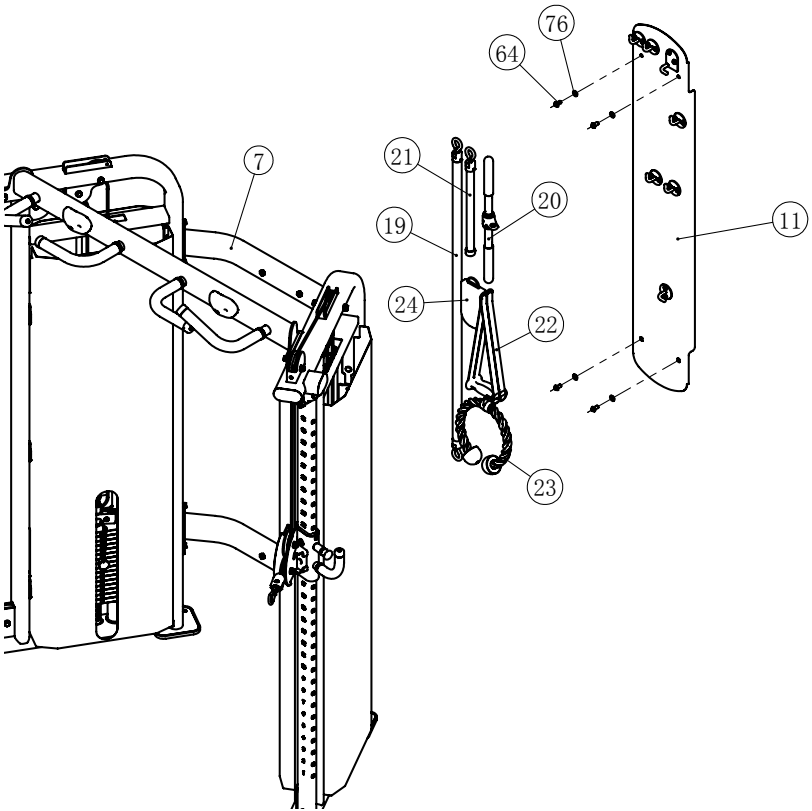

1. Attach the **Hang Board (No. 11)** to the two **Cross Braces (No. 7)** using:

4 **M10 x 20 Button Head Cap Screw (No. 64)**
4 **Washers φ11 x φ20 x 2 (No. 76)**

2. Place the Accessories under the silhouette of their shape.
Long Handle (No. 19)
Short Pull Handle Assembly (No. 20)
Short Handle (No. 21)
Two Lat Straps (No. 22)
Triceps Rope (No. 23)
Foot Lat Strap (No. 24)

ST800FT HEAVY WEIGHT STACK

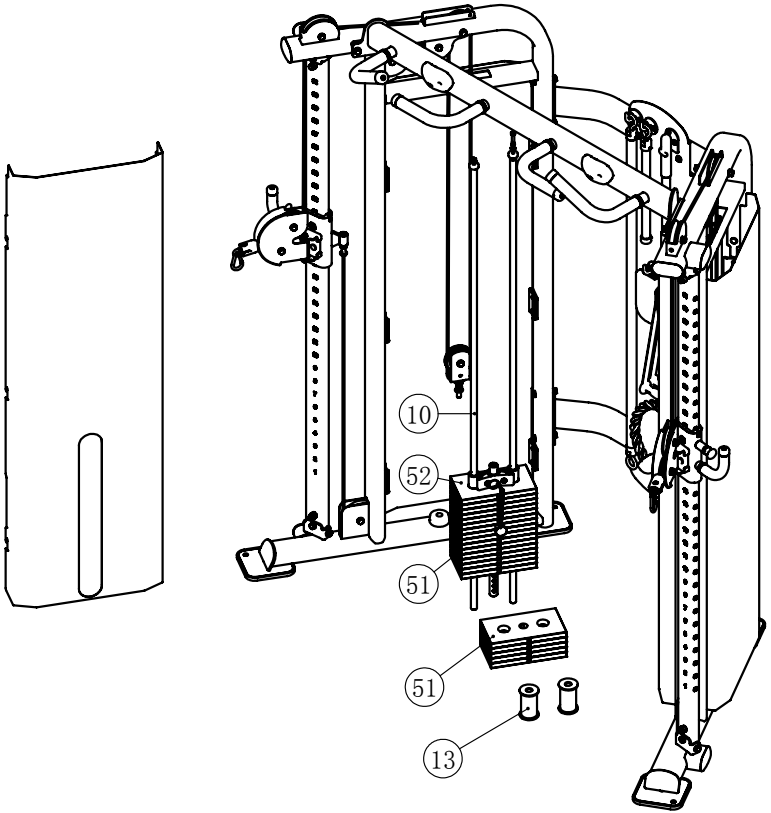

1. Disassemble the **Inner shroud (No. 17)**, two **Guide bars (No. 10)**, **Top Plate (No. 10)**, 15 **Weight Plates (No. 52)**.

2. Take away the two **Support Frame (No. 13)**, add 5 **Weight Plates (No. 51)** to the **Left Stand (No. 1)**.

Repeat on the **Right Stand (No. 2)**

EFFECTIVE RESISTANCE (Each Weight Stack)	
WEIGHT SELECTED	ACTUAL RESISTANCE
10	5
20	10
30	15
40	20
50	25
60	30
70	35
80	40
90	45
100	50
110	55
120	60
130	65
140	70
150	75
160	80

EFFECTIVE RESISTANCE (Heavy Weight Stack)	
WEIGHT SELECTED	ACTUAL RESISTANCE
170	85
180	90
190	95
200	100
210	105

RESISTANCE TRAINING BENEFITS AND TIPS

Always consult a physician before starting an exercise program. To be successful in your exercise program, it is important to develop an understanding of the basic principles of resistance training. Now that you have assembled your Spirit Fitness gym, it is only natural that you want to get started immediately. First, determine a few realistic, short term goals and expectations for yourself. Choose an appropriate exercise routine that best suits your individual needs.

- Warm up properly before engaging in resistance training. Stretching, yoga, jogging, calisthenics, or other cardiovascular exercise can help prepare your body for the heavier workload of lifting weights.
- Learn how to perform the exercise correctly before using heavy weight. Correct form is important to avoid injury and ensure that you work the proper muscle groups.
- Know your limitations. If you are new to resistance training or are starting back, after an extended layoff, start slowly and build foundational strength over a longer period of time.
- Pay attention to your breathing. As a general rule of thumb: inhale on the non-exertion part of the movement and exhale during the exertion portion. Never hold your breath.
- Keep in mind how important the recovery phase is in achieving your goals. The general rule is to allow a minimum of 48-72 hours before training the same muscles. If you still experience soreness after this period of time has elapsed, take a few additional days until the soreness has subsided.
- To achieve maximum results and avoid possible injury, consult a fitness professional to formulate a complete exercise program.

GENERAL MAINTENANCE

For best performance, Spirit recommends the following maintenance schedule. Check the integrity and function of the following parts. Replace all worn components immediately. Your equipment comes with a commercial schedule decal. For in home use, please follow the maintenance schedule listed below.

ROUTINE	COMMERCIAL	HOME	LATEST DATE ENTRY
Inspect: Links, Pull Pins, Snap Locks, Swivels, Weight Stack Pins	Daily	Weekly	
Clean: Upholstery	Daily	Weekly	
Inspect: Cables or Belts and their tension	Daily	Weekly	
Inspect: Accessory Bars, and Handles	Weekly	Monthly	
Inspect: All Decals	Weekly	3 Months	
Inspect: All Nuts and Bolts, Tighten if needed	Weekly	3 Months	
Inspect: Anti-Skid Surface	Weekly	3 Months	
Clean & Lubricate: Guide Rods with a Teflon (PTFE) based lubricant	Monthly	3 Months	
Lubricate: Seat Sleeves, Turcite Bushings, Linear Bearing	Monthly	3 Months	
Clean and Wax: All Glossy Finishes	6 Months	Yearly	
Repack with Grease: Linear Bearings	6 Months	Yearly	
Replace: Cables, Belts and Connecting Parts	Yearly	3 Years	

GENERAL MAINTENANCE

Links, Pull-Pins, Snap Hooks, Swivels, Weight Stack Pins:

• Check all pieces for signs of visible wear or damage.

• Check springs in snap hook and pull-pins for proper tension alignment.

• If the spring sticks or has lost its rigidity, replace it immediattely.

Upholstery:

• To ensure prolonged upholstery life and proper hygiene, all upholstered pads should be wiped down with a damp cloth after every workout.

• Periodically take the time to use a mild soap or an approved vinyl upholstery cleaner to deter the onset of cracking or drying. Avoid using any abrasive cleaners or cleaners not intended for use on vinyl.

• Replace ripped or warm upholstery immediately.

• Keep shart or pointed objects clear of all upholstery

Decals:

•Inspect and familiarise yourself with any safety warnings or other user information posted on each decal.

Nuts and Bolts:

•Inspect all nuts and bolts for any loosening and tightening if needed.

• Go through a re-tightening sequence periodically to ensure that all hardware is tensioned proper.

Anti-Skid Surfaces:

•These surfaces are designed to supply secure footing and need to be replaced if they appear worn or become slippery.

GENERAL MAINTENANCE

Belts and Cables:

•We uses only high quality belt, and mil-spec cables.

•Visually inspect the belt and cables for fraying, cracking, peeling, or discoloration.

•While the machine is not in use, carefully run your fingers along the belt or cable to feel for thinning or bulging areas.

• Replace belts and cables immediately at the first of damage or wear. Do not use equipment until belts or cables have been replaced.

Belt and Cable Tension:

•Referring to the Owners Manual, when belt or cables are used check all bolts attachments to be sure they are properly attached.

• Check slack in cables and re-adjust cable tension if needed.

Seat Sleeves, Guide Rods:

•Wipe down adjusting tubes with a dust free rag before applying lubricant.

• Lubricate seat sleeves and Guide Rods with a Silicon or Teflon based lubricant spray.

Linear Bearings:

• Referring to the Owner's Manual carefully disassemble the bearing from its housing and place a finger full of light grease (lithium, super lube, etc.) into the inside of the bearing. Using your finger, press the grease into the ball-bearing and their tracks. Repeat until the ball-bearing tracks are full of grease. Insert the shaft back into the bearing and wipe off excess grease.

SANITIZING YOUR SPIRIT FITNESS EQUIPMENT

- Unupholstered high-contact surfaces (hard plastics) can be sanitized using a 75% isopropyl alcohol solution and a clean, dry cloth. Spray surfaces to be sanitized, and use the dry cloth to wipe clean. Allow surfaces to dry before using.
- For upholstered or soft-plastic surfaces, use a conditioner after sanitizing. Be sure to follow the instructions provided by the conditioner manufacturer to ensure proper use of the conditioner.
- Alternatively, you can make your own spray by mixing the proper ratio of isopropyl alcohol and distilled water to reach a 75% solution.
- For more details on sanitization, or to learn how to make your own spray solution, please visit https://support.spiritfitness.com/hc/en-us/articles/4406787148564 .

ST800FT FUNCTIONAL TRAINER WARRANTY

EFFECTIVE NOVEMBER 24, 2021

Spirit Fitness warrants the ST800FT Functional Trainer for a period of time listed below from the date of sale, as determined by sale receipt, or in the absence of a sales receipt eighteen (18) months from the original factory shipping date. Spirit Fitness' responsibilities include providing new or remanufactured parts, at Spirit Fitness' option, and technical support to our independent dealers and servicing organizations. In the absence of a dealer or service organization, these warranties will be administered by Spirit Fitness directly. The warranty period applies to the following components:

	Frame	**Parts**	**Cables**	**Upholstery/Grips**
Residential (vendor defects only)	Lifetime	Lifetime	Lifetime	Lifetime
Commercial (non-dues paying facilities)	10 Years	5 Years	1 Year	6 Months

*Prisons and correctional facilities are excluded from warranty coverage.

NORMAL RESPONSIBILITIES OF THE FACILITY

The facility is responsible for the items listed below:

1. The warranty registration card must be completed and returned to the address listed on the card within 10 days of the original purchase, or completed online to validate the manufacturer's limited warranty.
2. Proper use of the fitness equipment in accordance with the instructions provided in this manual.
3. Expenses for making the fitness equipment accessible for servicing, including any item that was not part of the fitness equipment at the time it was shipped from the factory.
4. Damages to the fitness equipment finish during shipping, installation or following installation.
5. Routine maintenance of this unit as specified in this manual.

EXCLUSIONS

This warranty does not cover the following:

1. CONSEQUENTIAL, COLLATERAL, OR INCIDENTAL DAMAGES SUCH AS PROPERTY DAMAGE AND INCIDENTAL EXPENSES RESULTING FROM ANY BREACH OF THIS WRITTEN OR ANY IMPLIED WARRANTY. *NOTE: Some states do not allow the exclusion or limitation of incidental or consequential damages, so this limitation or exclusion may not apply to you.*
2. Service call reimbursement to the facility. Service call reimbursement to the dealer that does not involve malfunction or defects in workmanship or material, for units that are beyond the warranty period, for units that are beyond the service call reimbursement period, for fitness equipment not requiring component replacement, or fitness equipment not in non-dues paying facility or household use.
3. Damages caused by services performed by persons other than authorized Spirit Fitness service companies; use of parts other than original Spirit Fitness parts; or external causes such as corrosion, discoloration of paint or plastic, alterations, modifications, abuse, misuse, accident, improper maintenance, inadequate power supply, or acts of God.
4. Products with original serial numbers that have been removed or altered.
5. Products that have been: sold, transferred, bartered, or given to a third party.
6. Products that do not have a warranty registration card on file at Spirit Fitness. Spirit Fitness reserves the right to request proof of purchase if no warranty record exists for the product.
7. THIS WARRANTY IS EXPRESSLY IN LIEU OF ALL OTHER WARRANTIES EXPRESSED OR IMPLIED, INCLUDING THE WARRANTIES OF MERCHANTABILITY AND/OR FITNESS FOR A PARTICULAR PURPOSE.
8. Product used in prisons and correctional facilities.

Warranties outside of the United States may vary. Please contact your local dealer for details.

SERVICE

Keep your bill of sale. Twelve (12) months from the date on the bill of sale or eighteen (18) months from the date of factory shipping as determined by the serial number establishes the labor warranty period should service be required. If service is performed, it is in your best interest to obtain and keep all receipts. This written warranty gives you specific legal rights. You may also have other rights that vary from state to state. Service under this warranty must be obtained by following these steps, in order:

1. Contact your selling authorized Spirit Fitness dealer. OR
2. Contact your local authorized Spirit Fitness service organization.
3. If there is a question as to where to obtain service, contact our service department at (870) 935-1107.
4. Spirit Fitness' obligation under this warranty is limited to repairing or replacing, at Spirit Fitness' option, the product through one of our authorized service centers. All repairs must be preauthorized by Spirit Fitness.
5. The owner is responsible for adequate packaging upon return to Spirit Fitness. Spirit Fitness is not responsible for damages in shipping. Make all freight damage claims with the appropriate freight carrier. DO NOT SHIP ANY UNIT TO OUR FACTORY WITHOUT A RETURN AUTHORIZATION NUMBER. All units arriving without a return authorization number will be refused.
6. For any further information, or to contact our service department by mail, send your correspondence to:

SPIRIT FITNESS, INC.
P.O. Box 2037
Jonesboro, AR 72402-2037

Product features or specifications as described or illustrated are subject to change without notice. All warranties are made by Spirit Manufacturing, Inc. This warranty applies only in the 48 contiguous United States. NOTE: This does not apply to Alaska or Hawaii.

800.258.4555
spiritservice@spiritfitness.com
www.spiritfitness.com

Spirit Fitness
3000 Nestle Road
Jonesboro, AR 72401

SPIRIT COMMERCIAL

ST800FT Owners Manual
© 2021 All Rights Reserved
Revision: 11.24.2021