Available At IRON COMPANY

SPIRIT

CSD-LPSR

LAT PULLDOWN / SEATED ROW

CSD-LPSR_657773_OM_20231026

Online Support

If you require assistance or are experiencing issues with your Spirit Unit, please contact customer care for additional help.

1-800-258-8511

questions@spiritfitness.com

Warranty Registration

Scan to quickly and easily register your new Spirit Fitness unit.

Table of Contents

Product Registration 3
Warning / Safety Instructions
Product Labels 4
Safety Instructions 5
Facility Safety 6
Precautions 7
Safety Guidelines 8
Safeguards 9
Assembly
Parts of Your Unit 11
Assembly 12
Cable Routing Diagram 18
Maintenance
Maintenance & Care 21
Exploded View Diagram 22
Warranty & Troubleshooting
Warranty 24
Troubleshooting 27

PRODUCT REGISTRATION

Congratulations on your new unit, and welcome to the Spirit Fitness family!

Thank you for your purchase of this quality unit from Spirit Fitness. Your new unit was manufactured by one of the leading fitness manufacturers in the world and is backed by one of the most comprehensive warranties available. Through your dealer, Spirit Fitness will do all we can to make your ownership experience as pleasant as possible for many years to come.

If not purchased direct from Spirit Fitness, the local dealership where you purchased this unit is your administrator for all Spirit Fitness warranty and service needs. Their responsibility is to provide you with the technical knowledge and service personnel to make your experience more informed and any difficulties easier to remedy.

Please take a moment at this time to record the name of the dealer, their telephone number, and the date of purchase below to make any future, needed contact easy. We appreciate your support and we will always remember that you are the reason that we are in business.

Serial Number	
Date of Purchase	
Dealer / Place of Purchase	
Date of Installation	

WARRANTY REGISTRATION

Use your smartphone to scan the QR code above to quickly and easily register your new Spirit Fitness unit.

You can also go to **spiritfitness.com/warranty** under the Support tab to register online.

Version: 2.0
Revision: 10/26/23

PRODUCT LABELS

The following pages show examples of Spirit® Fitness warning labels and communication stickers placed on the equipment as part of the manufacturing process. It is critical that owners maintain the integrity and placement of these stickers. If you find any stickers missing or damaged contact your local dealer or distributor for a replacement.
If any instructions or information are not clear, and please contact to SPIRIT FITNESS customer service right away.
NOTE: STICKERS AND LABELS ARE NOT SHOWN TO SCALE

Warning Decal

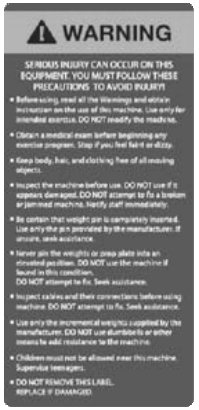

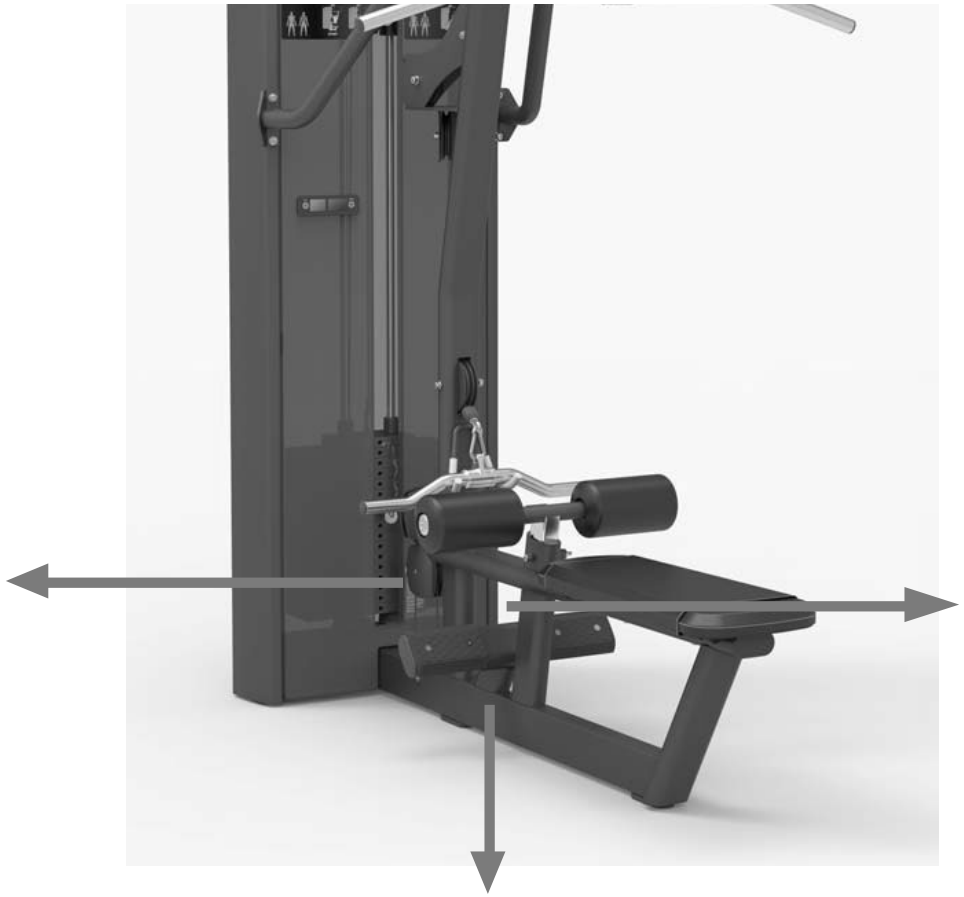

Serial Number Decal

California Prop 65 Warning Decal(For US model only)

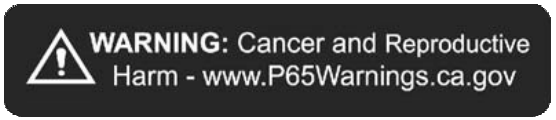

SAFETY INSTRUCTIONS

Read the Owner's Manual carefully before assembling, servicing or using the equipment. It is the responsibility of the facility owner and/or owner of the equipment to instruct users on proper operation of the equipment and review all labels.

WARNING - Serious injury could occur if these safety precautions are not observed:

1. Obtain a medical exam before beginning any exercise program .
2. Stop exercising if feeling faint, dizzy or experiencing pain and consult your physician .
3. Obtain instructions before using .
4. Read and understand the owner's manual and all warnings posted on the unit before using .
5. Keep all children (12 and under) away. Teenagers (13 and over) and disabled must be supervised .
6. Keep body and clothing free from and clear of all moving parts .
7. Use the unit only for the intended use. DO NOT modify the unit .
8. Inspect unit prior to use. DO NOT use if it appears damaged or inoperable .
9. Inspect all cables and connections prior to use. DO NOT use if any components are worn, frayed or damaged.
10. DO NOT attempt to fix a broken or jammed unit. Notify floor staff .
11. DO NOT use if guards are missing or damaged .
12. Be sure that the weight pin is completely inserted. Use only the pin provided by the manufacturer .
13. If unsure seek assistance.
14. Never pin the weights in an elevated position. DO NOT use this unit if found in this condition .
15. Seek assistance from floor staff.
16. DO NOT use dumbbells or other incremental weights, except those provided by the manufacturer .
17. Report any malfunctions, damage or repairs to the facility .
18. Replace any warning labels if damaged, worn or illegible .
19. DO NOT use this unit outdoors .
20. **User Weight Limit: 360 lbs.**

Please ensure that you review and adhere to the user weight restrictions of your new unit. Failure to do so may result in serious injury or damage to your unit.

FACILITY SAFETY PRECAUTIONS

WARNING!

- Read the Owner's Manual carefully before assembling, servicing or using the equipment.
- Make sure that each unit is set up and operated on a solid level surface.
- Make sure that all users are properly trained on how to use the equipment.
- Make sure there is enough room for safe access and operation of the equipment.
- Perform regular maintenance checks on the equipment. Also pay close attention to all areas most susceptible to wear, including (but not limited to) cables, pulleys, belts and grips.
- Immediately replace worn or damaged components. If unable to immediately replace worn or damaged components then remove from service until the repair is made.
- Use only Spirit Fitness supplied components to maintain/ repair the equipment.
- Keep a repair log of all maintenance activities.
- Inspect all cables and belts and connections prior to use. DO NOT use if any components are worn, frayed or damaged.

NOTE: It is the sole responsibility of the user/owner or facility operator to ensure that regular maintenance is performed.

PRECAUTIONS

These safety notes are directed to you as the owner of the Strength Equipment manufactured by Spirit Fitness. Please train all your users and fitness staff to follow these safety instructions.

DO

- Do encourage each of your users to discuss their health program or fitness regimen with a healthcare professional.
- Do stop operating your Strength Equipment if you feel dizzy or faint.
- Do perform regular preventative maintenance.
- Do exercise slowly until you reach a level of comfort.

DO NOT

- Do not let unsupervised children operate the Strength Equipment.
- Do not use without proper athletic shoes.
- Do not use in rainy weather outdoors, or in an enclosed pool environment.
- Do not drop or insert any object, hands, or feet into any opening or within the area of the product.
- Do not attempt to remove any shrouds or modify the Strength Equipment.

WARNING

- Your Strength Equipment manufactured by Spirit Fitness is designed for the exercise in a commercial or consumer environment.
- Please check with your physician prior to beginning any exercise program.
- Do not push yourself to excess. Stop if you are feeling faint, dizzy, or exhausted. Use common sense during workout.
- Read the owner's manual in its entirety before operating the Strength Equipment.
- Failure to obey this warning can result in injury or death.

SAFETY GUIDELINES AND PRACTICE

Spirit Fitness recommends that all fitness equipment be used in a supervised area. It is recommended that the equipment be located in an access controlled area. Control is the responsibility of the owner. The extent of control is at the discretion of the owner. It is the responsibility of the purchaser/user of Spirit Fitness products to read and understand the owner's manual, and warning labels; as well as instruct all individuals, whether end users or supervising personnel, on proper usage of the equipment.

- Use machine only as described in the manual. Failing to follow proper instructions may result in injury.
- Do not lean against or pull on the framework or any component, whether machine is at rest or in use.
- Inappropriate or improper use may result in injury to users or third parties (bystanders).
- Do not use machine if it is not located on a solid level surface or is improperly installed.
- Provide an adequate safety perimeter between the machine, walls and other equipment to ensure that the facility has the proper clearance for usage and training.

Live Area and Training Area

The live area shall be not less than 600mm (23.62") greater than the training area in the directions from which the equipment is accessed. The live area must also include the area for emergency dismount.

SAFEGUARDS

The following fitness safeguards and operating precautions are directed to purchasers and users of the Strength Equipment. Management should ensure that users and staff are trained to follow these same instructions. Failure to follow these safeguards may result in injury or serious health risk.

Proper Usage

- DO NOT use any equipment in any way other than designed or intended by the manufacturer. It is imperative that SPIRIT FITNESS equipment is used properly to avoid injury.
- Injuries may result if exercising improperly or excessively. It is recommended that all individuals consult a physician prior to commencing an exercise program. If at any time during exercise you feel faint, dizzy or experience pain,
- STOP EXERCISING and consult your physician.
- Keep body parts (hands, feet, hair, etc.), clothing and jewelry away from moving parts to avoid injury.
- Follow instructions provided in this manual for correct foot position and basic techniques.
- **The maximum weight for individuals using the Strength Equipment should not exceed 360 pounds (163 kilograms).**

Inspection

- DO NOT use or permit use of any equipment that is damaged and/or has worn or broken parts. For all SPIRIT FITNESS equipment use only replacement parts supplied by SPIRIT FITNESS .
- Cables and belts pose an extreme liability if used when frayed. Always replace any cable or belt at first sign of wear (consult SPIRIT FITNESS if uncertain).
- EQUIPMENT MAINTENANCE - Preventative maintenance is the key to smooth operating equipment as well as to keep your liability to a minimum. Equipment needs to be inspected at regular intervals.
- Ensure that any person(s) making adjustments or performing maintenance or repair of any kind is qualified to do so.
- DO NOT ATTEMPT TO USE OR REPAIR ANY ACCESSORY APPROVED FOR USE WITH THE SPIRIT FITNESS EQUIPMENT WHICH APPEARS TO BE DAMAGED OR WORN.
- Check all belts, pulleys and bungee cords regularly for signs of wear, and replace if needed.
- Check regularly and follow all instructions for maintenance as specified in this manual.
- Replace immediately any defective parts and do not operate unit until all repairs are complete.

Operating Warnings

- Keep children away from the equipment. Parents or others supervising children must provide close supervision of children if the equipment is used in the presence of children.
- Do not allow users to wear loose fitting clothing or jewelry while using equipment. It is also recommended to have users' secure long hair back and up to avoid contact with moving parts.
- All bystanders must stay clear of all users, moving parts and attached accessories and components while machine is in operation.

ASSEMBLY & SETUP

Use the following procedures to unpack and assemble your Strength Equipment manufactured by Spirit Fitness.

Unpacking &Parts

1. Cut the straps then lift the box over the unit and unpack. Remove all parts from the shipping carton and foam inserts, and verify that all parts are included in your shipment:
2. Locate the hardware package. The hardware is separated into four steps. Remove the tools first. Remove the hardware for each step as needed to avoid confusion. The numbers in the instructions that are in parenthesis (#) are the item number from the assembly drawing for reference.

NOTE: All tools required to assemble the Strength Equipment are included within the packaging. If you are missing any of the parts listed above, inspect the packing material and the box for items that may have been overlooked.

If parts are missing, or if you have any operational questions, please call your local Spirit Fitness's Service department or the distributor who sold you the product. Have your serial number ready.

CAUTION: Damage to the Strength Equipment during assembly is not covered as part of the limited Spirit Fitness warranty. Take care not to drop or lean the Strength Equipment on its side. Carefully stand the Strength Equipment up in the normal upright position on a stable surface so it will not tip over during assembly.

Protect the environment by not disposing of this product with household waste. Check your local authority or approved waste center for recycling advice and facilities.

Product Specifications

Maximum User Weight	360 lbs / 163 kgs
Weight	551 lbs / 250 kgs
Overall Dimensions	71" x 47.8" x 89.4" 1808 x 1213 x 2270 mm

PARTS OF YOUR UNIT

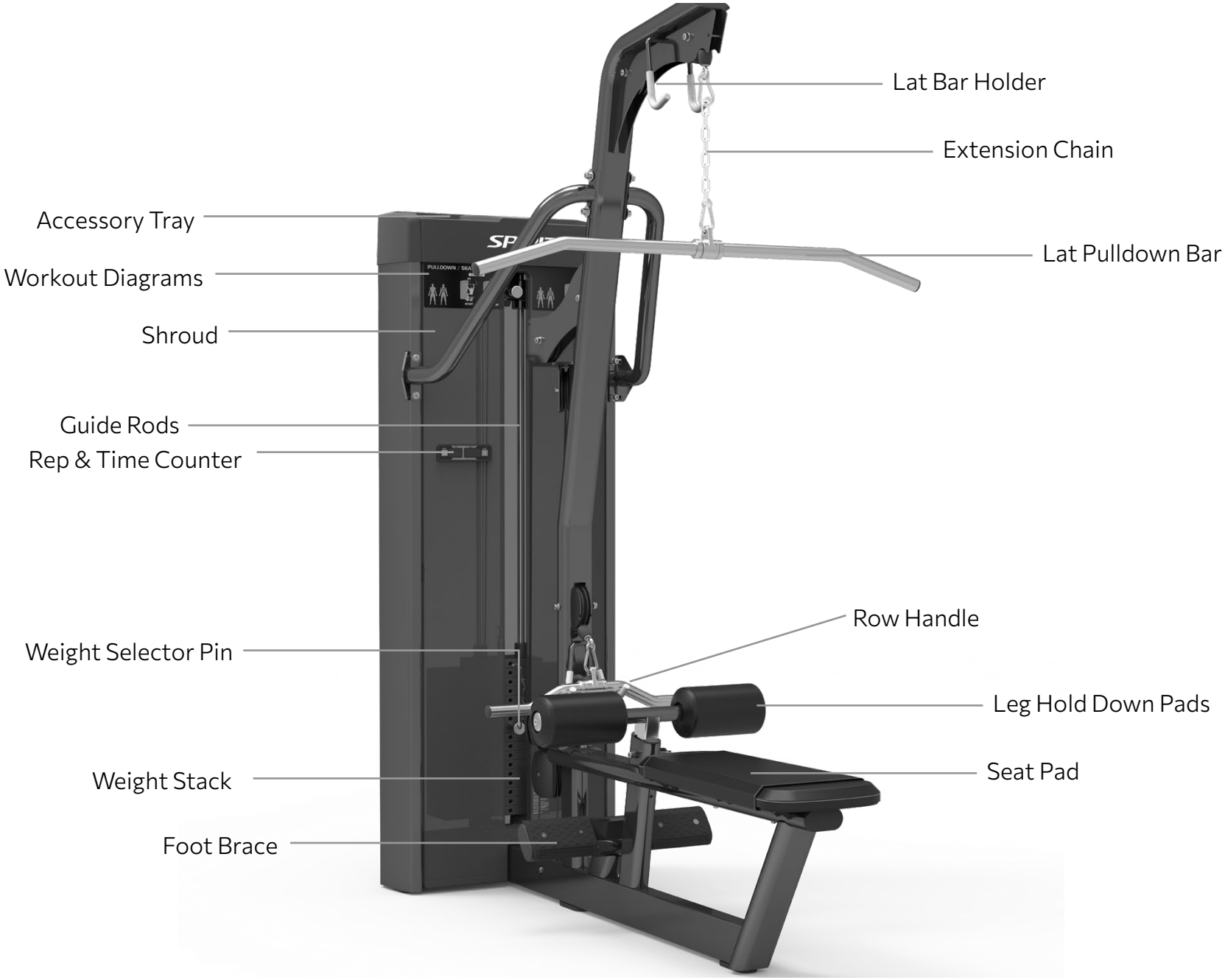

ASSEMBLY

	No.	Description	Specifications	Qty
1	001	Doorframe		1
	020	Inner Hexagon Socket Head Bolt	M10*35	4
	024	Spring washer	M10	4
	027	Flat washer	Φ20*Φ10.5*2	4
	040	Ground frame		1
	045	Cable 1		1
	047	Foot rack		1
	070	Pulley set		1
	076	Socket cap screw	M10*25	2
	077	Socket cap screw	M10*50	1
	080	Spring washer	M10	4
	082	Flat washer	Φ20*Φ10.5*2	2
	084	Rivet nut with small countersunk head	M8*18	1

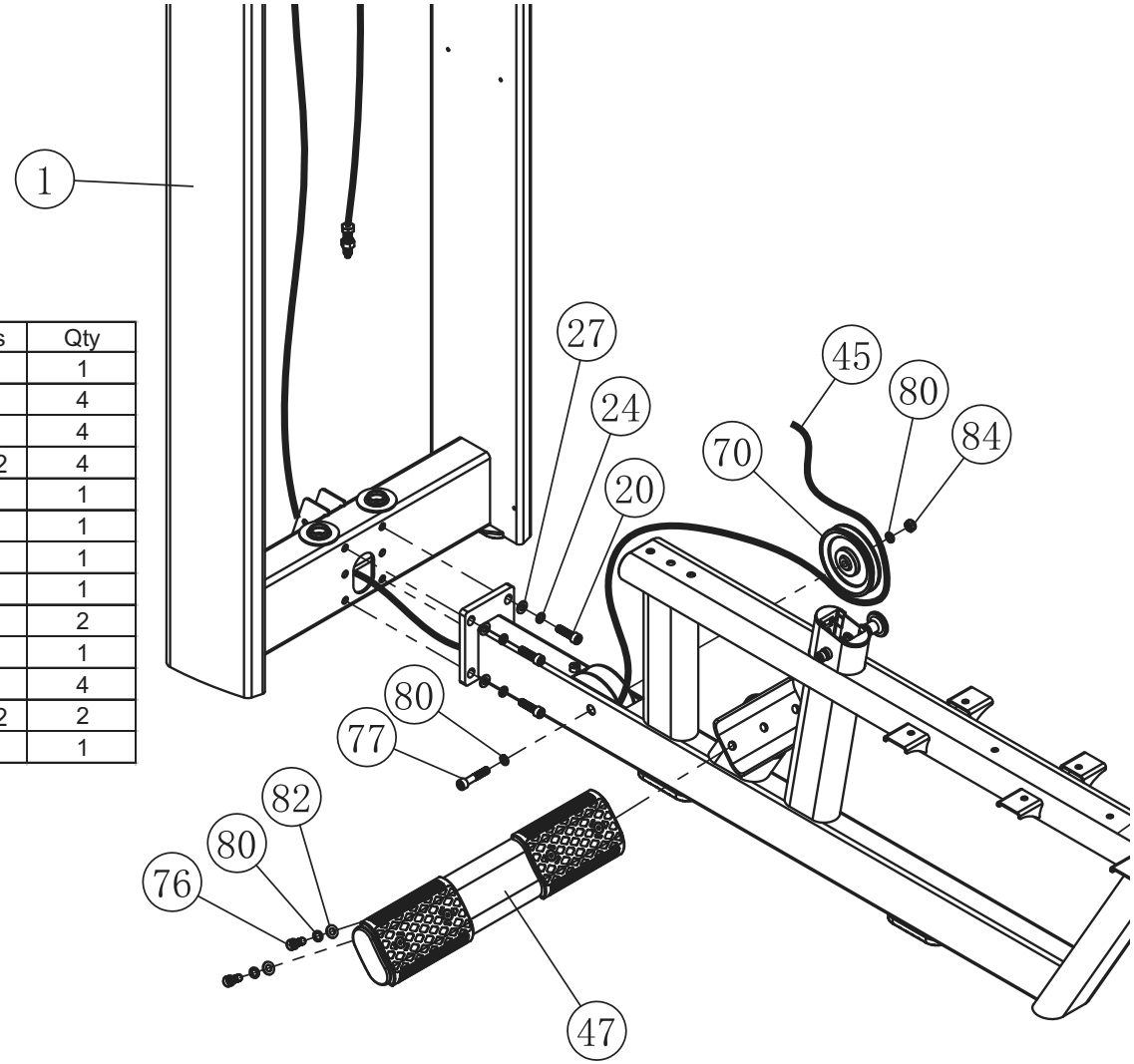

ASSEMBLY - CONTINUED

	No.	Description	Specifications	Qty
2	042	Left connection frame		1
	043	Right connection frame		1
	045	Cable 1		1
	048	Stand frame		1
	076	Socket cap screw	M10*25	10
	080	Spring washer	M10	10
	082	Flat washer	Φ20*Φ10.5*2	10

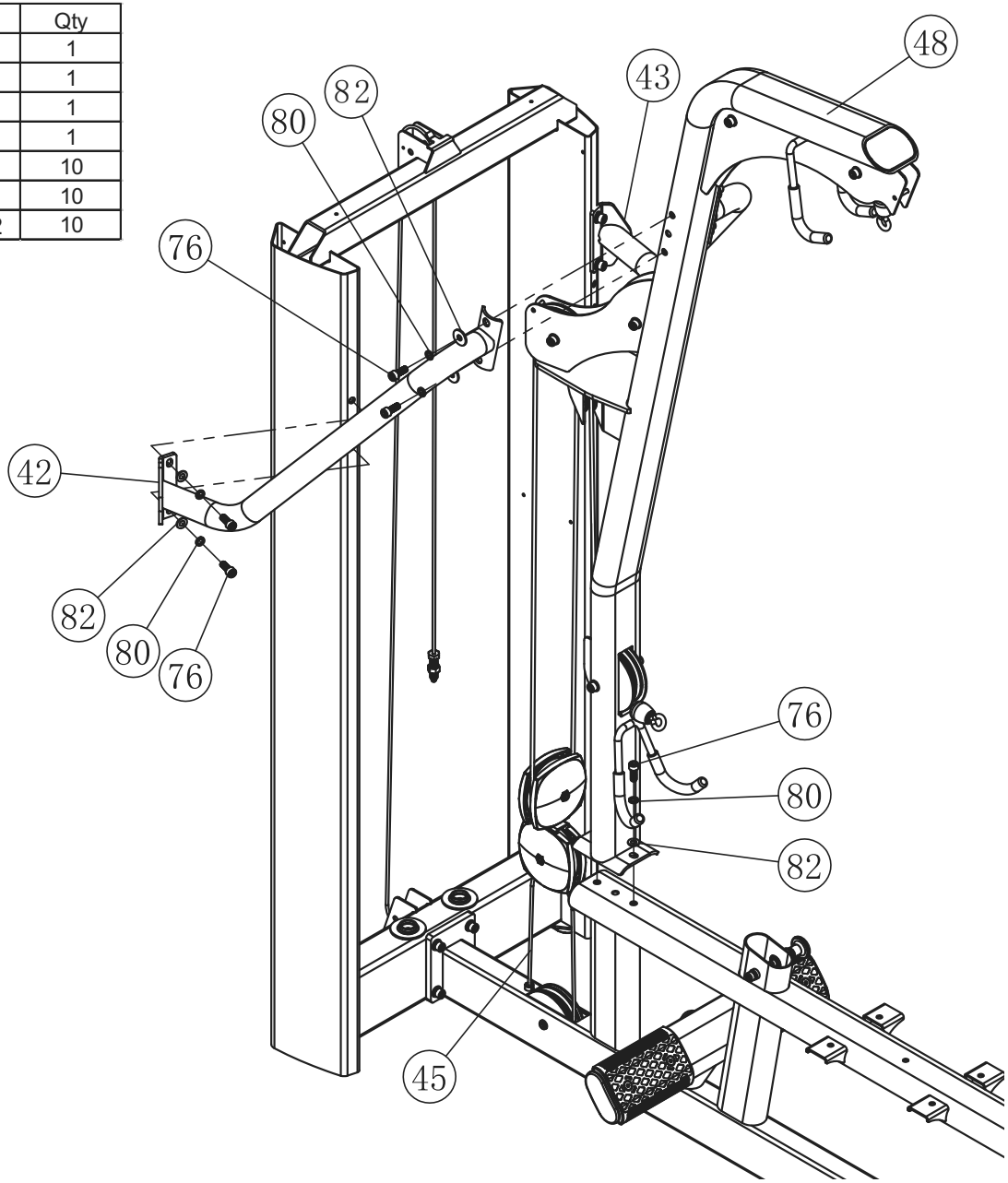

ASSEMBLY - CONTINUED

	No.	Description	Specifications	Qty
3	041	Adjustment frame		1
	049	Aluminum cover		2
	052	Stop screw		1
	057	High pull handle set		1
	058	Low pull handle set		1
	072	Semi-sliding sleeve group		2
	073	Countersunk head hexagon socket screw	M8*25	2
	075	Socket cap screw	M8*75	2
	079	Spring washer	M8	2
	080	Spring washer	M10	1
	081	Flat washer	Φ16*Φ8.4*1.6	2
	086	Back pad		2
	087	Protect plate		1

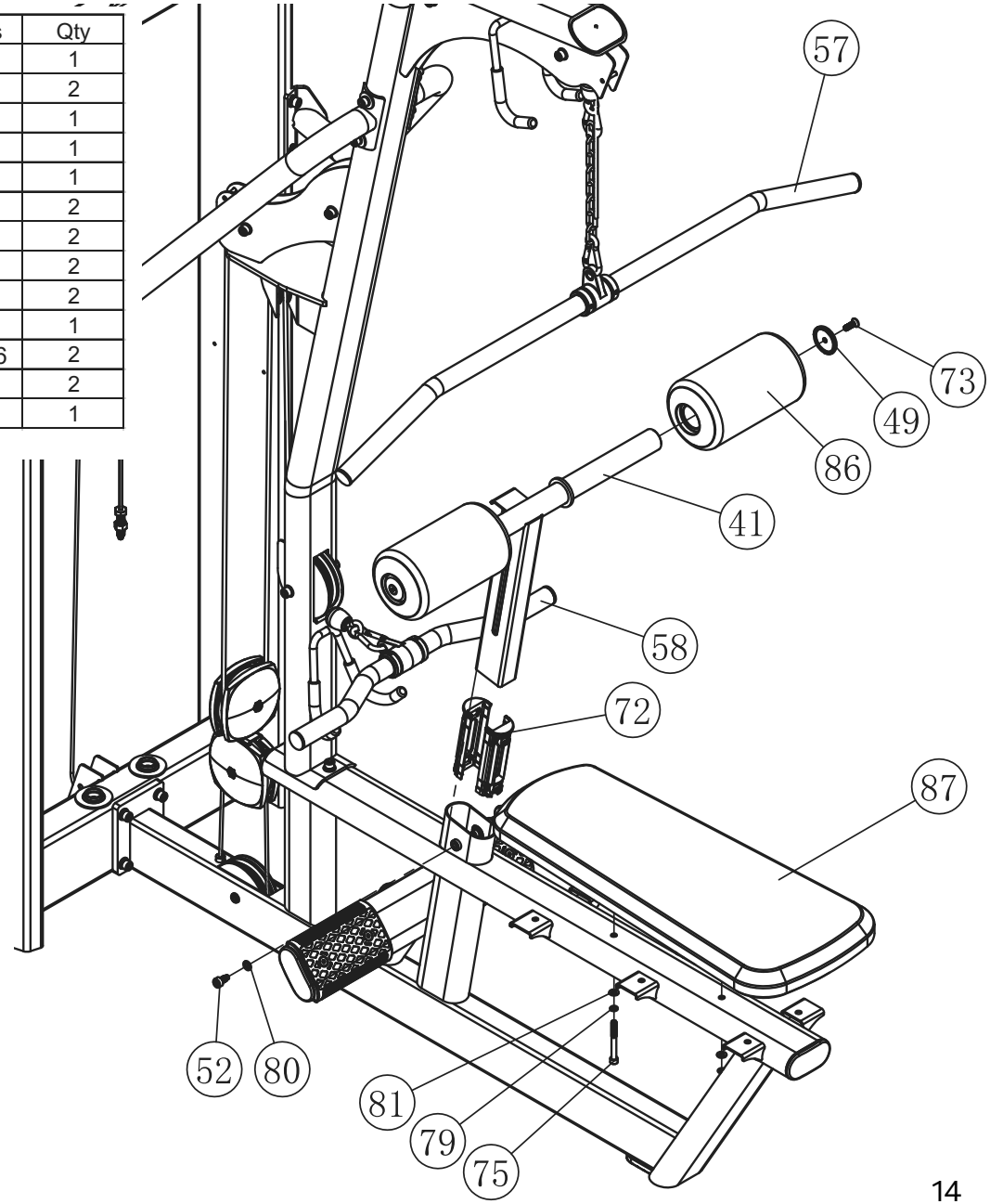

ASSEMBLY - CONTINUED

	No.	Description	Specifications	Qty
4	004	Guide rod		2
	005	Guide rod fixed plate		1
	009	Rubber bumper	φ64*φ32*φ20*35	2
	010	Rubber bumper	φ38*φ21*10	2
	012	Rod end cover		4
	013	Pulley sets	φ89*32	2
	014	Selector pin		1
	019	Inner Hexagon Socket Head Bolt	M8*20	2
	021	Inner Hexagon Socket Head Bolt	M10*55 30	2
	023	Spring washer	M8	2
	026	Flat washer	Φ16*Φ8.4*1.6	2
	027	Flat washer	Φ20*Φ10.5*2	2
	028	Nylon nut	M10	2
	045	Cable 1		1
	059	10lb weight plate		10
	060	10lb top weight plate		1
	088	15lb weight plate		6

ASSEMBLY - CONTINUED

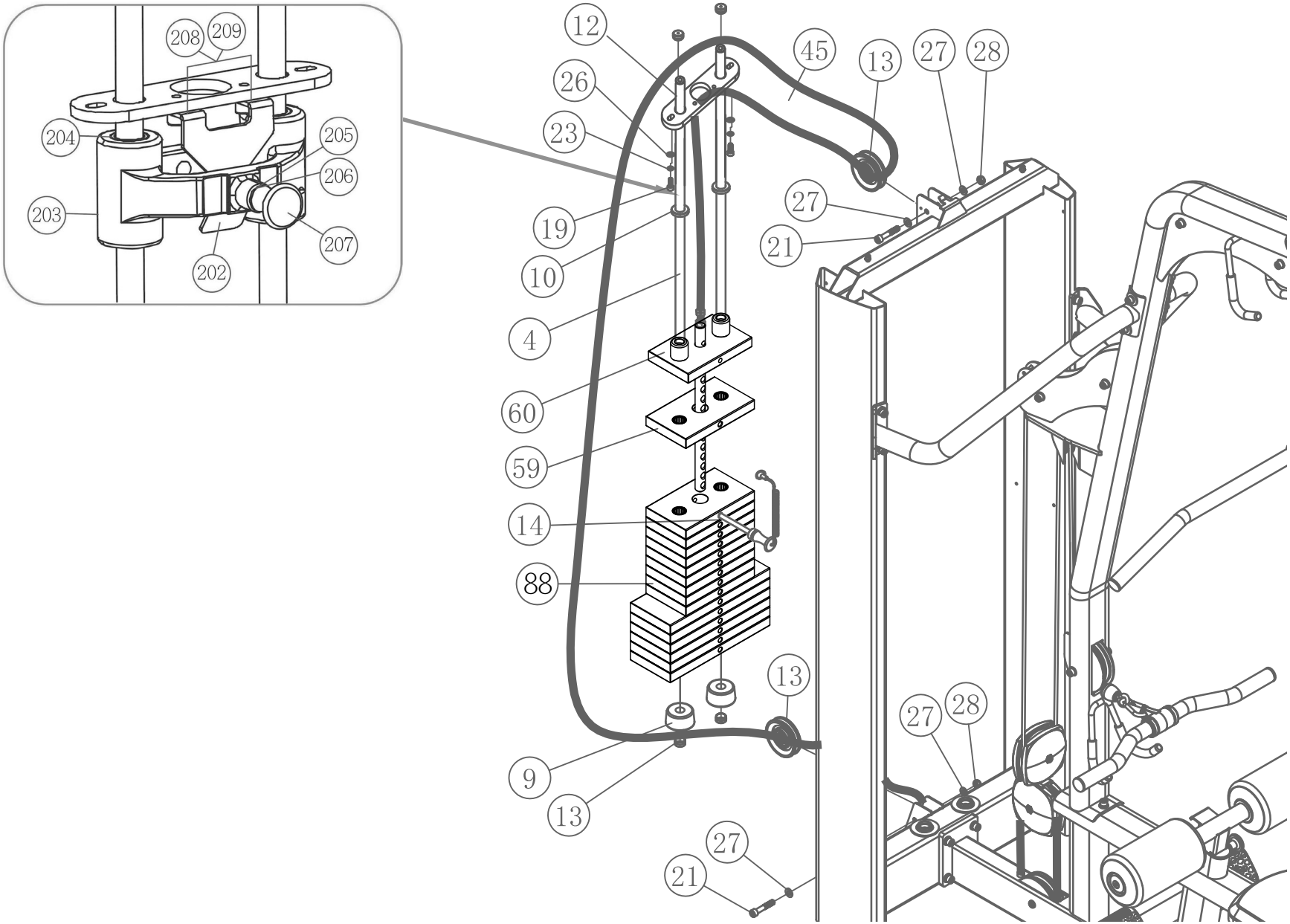

ASSEMBLY - CONTINUED

	No.	Description	Specifications	Qty
5	002	Upper shield		1
	003	Shield fixed plate		4
	006	Fixed bushing		12
	007	Front shield		1
	008	Back shield		1
	015	Cross recessed countersunk head screw	M5*10	8
	016	Countersunk head hexagon socket screw	M6*16	12
	018	Inner Hexagon Socket Head Bolt	M6*16	2
	022	Spring washer	M6	2
	025	Flat washer	Φ12*Φ6.4*1.6	2

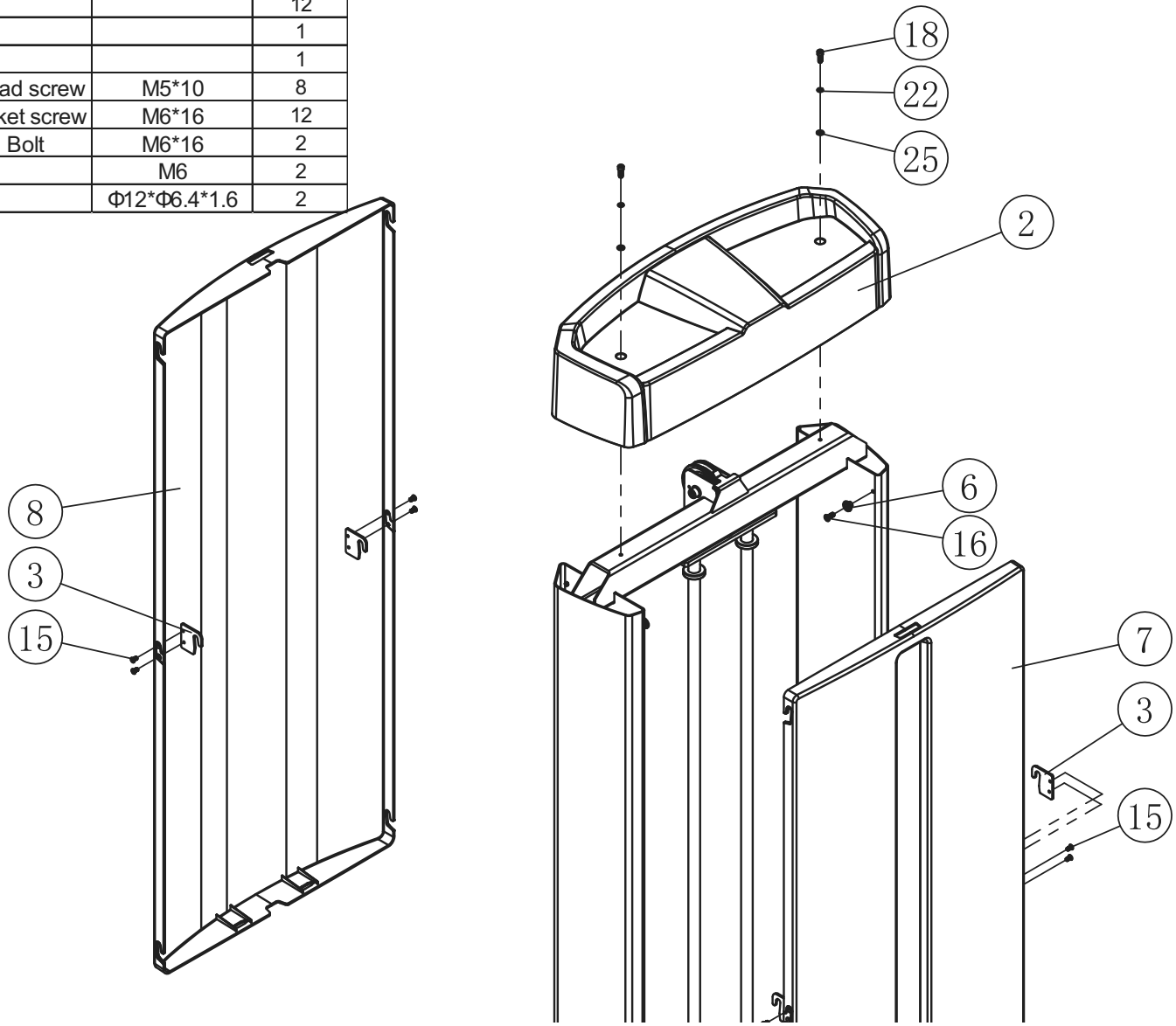

CABLE ROUTING DIAGRAM

No.	Description	Spec	Qty
A	Dry Reed Pipe Connection Wire		1
B	Power Line		1

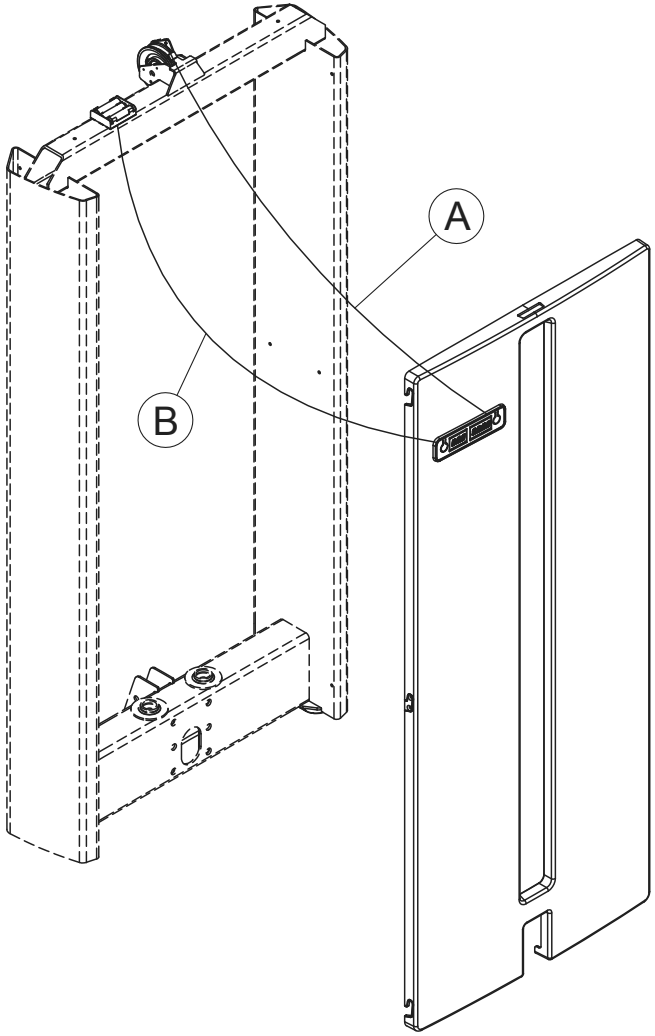

START WORKOUT

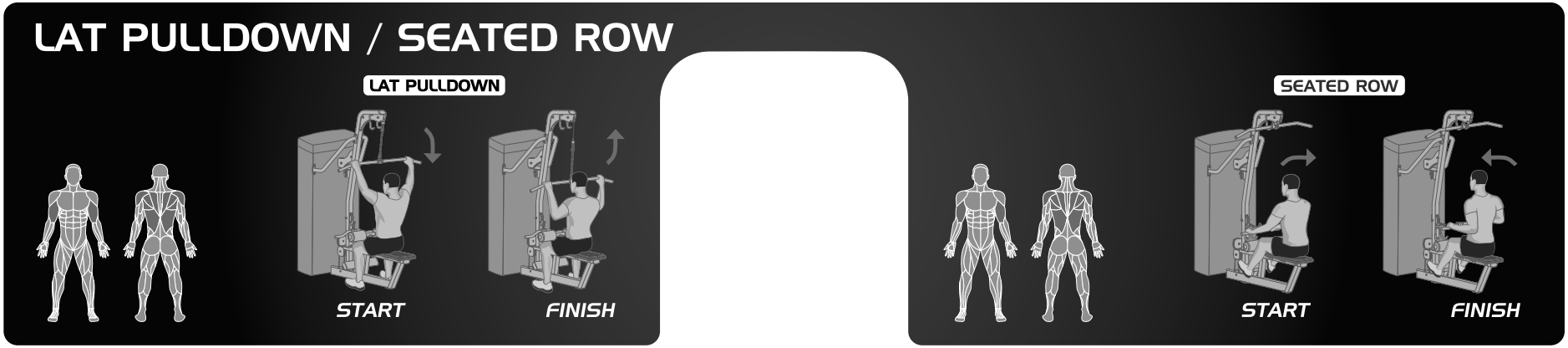

REPETITION AND TIME COUNTER

A battery-operated (batteries not included) console is available for use on your equipment.
The console tracks workout time and number of repetitions per set.

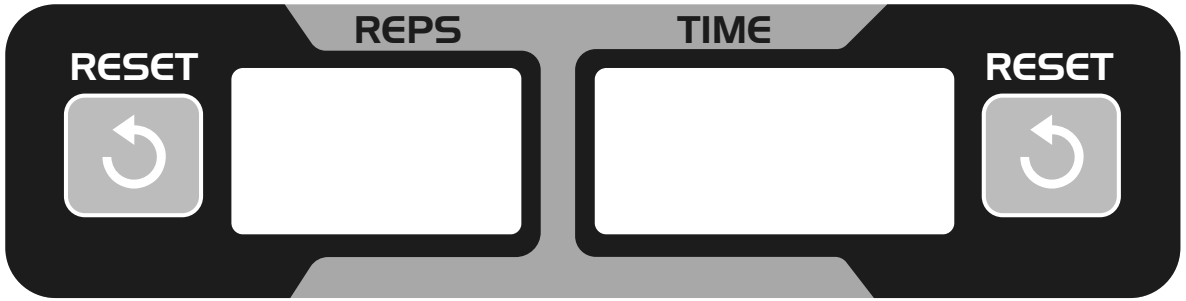

1	Repetition Counter
2	Time Counter

This counter is powered by 2 pcs of AA batteries. (Alkaline Battery Recommended)

MAINTENANCE

A regular preventative maintenance schedule with all fitness equipment ensures that products are working at an optimal condition without affecting the end user exercise experience. To assist in the maintenance regiment, it is recommended to break service into: Daily, Weekly, & Monthly activities. Reference the table below on the preventative maintenance activities to be performed.

All preventive maintenance activities must be performed on a regular basis. Performing routine preventive maintenance actions can aid in providing safe, trouble-free operation of all SPIRIT equipment. SPIRIT is not responsible for performing regular inspection and maintenance actions for your machines. Instruct all personnel in equipment inspection and maintenance actions and also in accident reporting and recording.

Action	Daily	Weekly	Monthly	Bi-Monthly
Cleaning				
Upholstery	✓			
Handgrips	✓			
Main Frame		✓		
Guide Rod			✓	
Internal Tower				✓
Inspect				
Belt / Cables		✓		
Fasteners			✓	
Handgrips			✓	
Upholstery			✓	
Labels			✓	
Pulleys				✓
Main Frame				✓
Lubricate				
Guide Rods			✓	
Add on Track			✓	

EXPLODED VIEW DIAGRAM

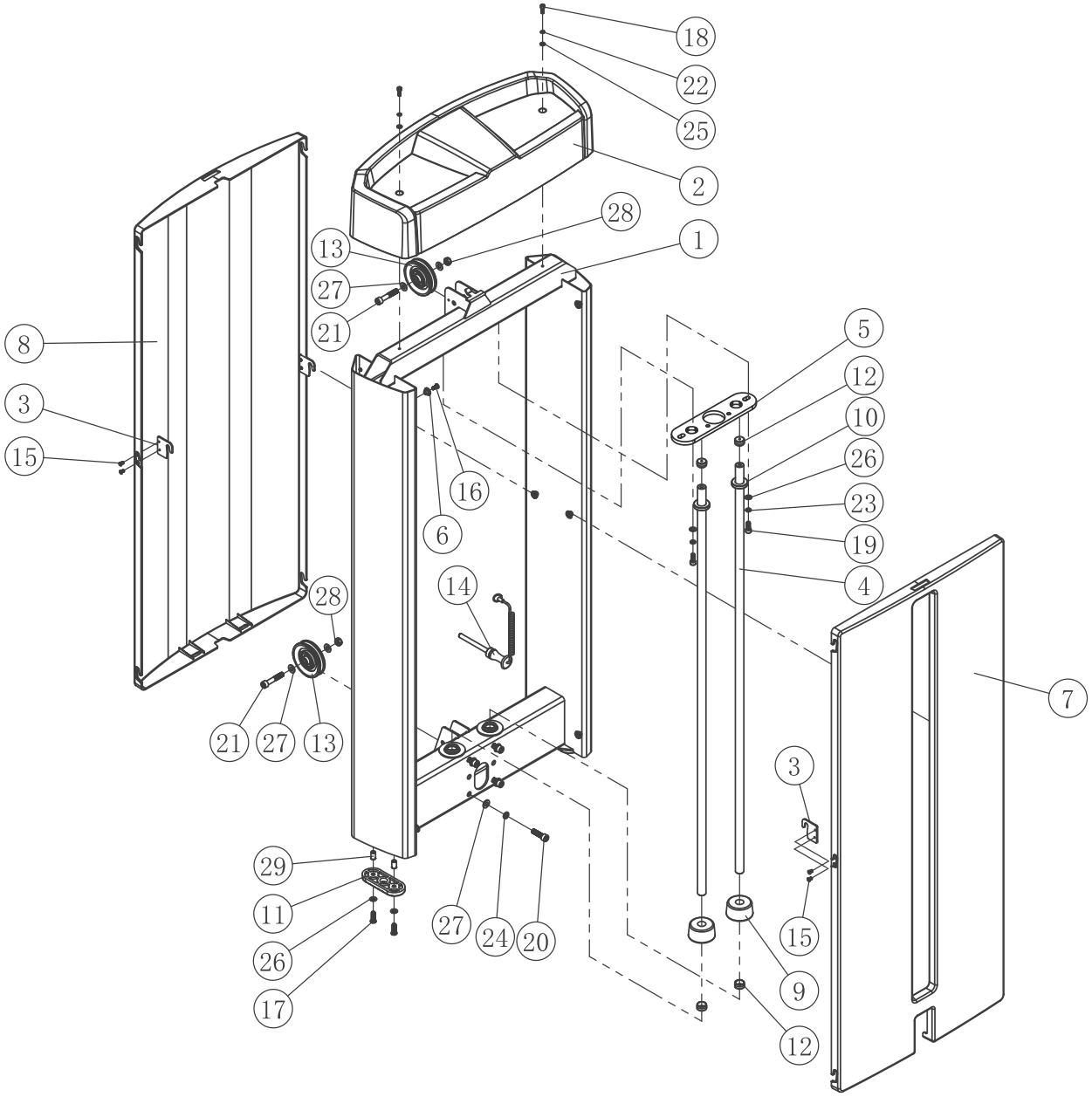

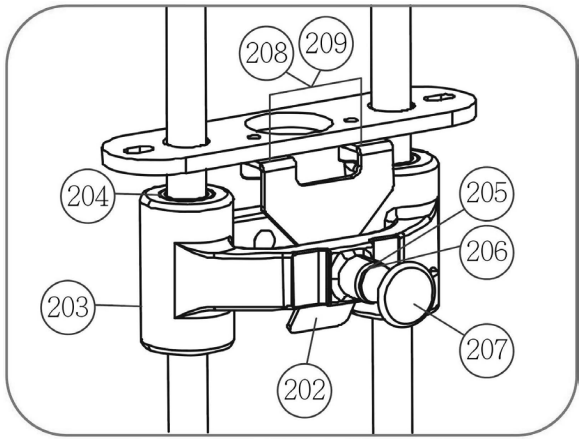

EXPLODED VIEW DIAGRAM

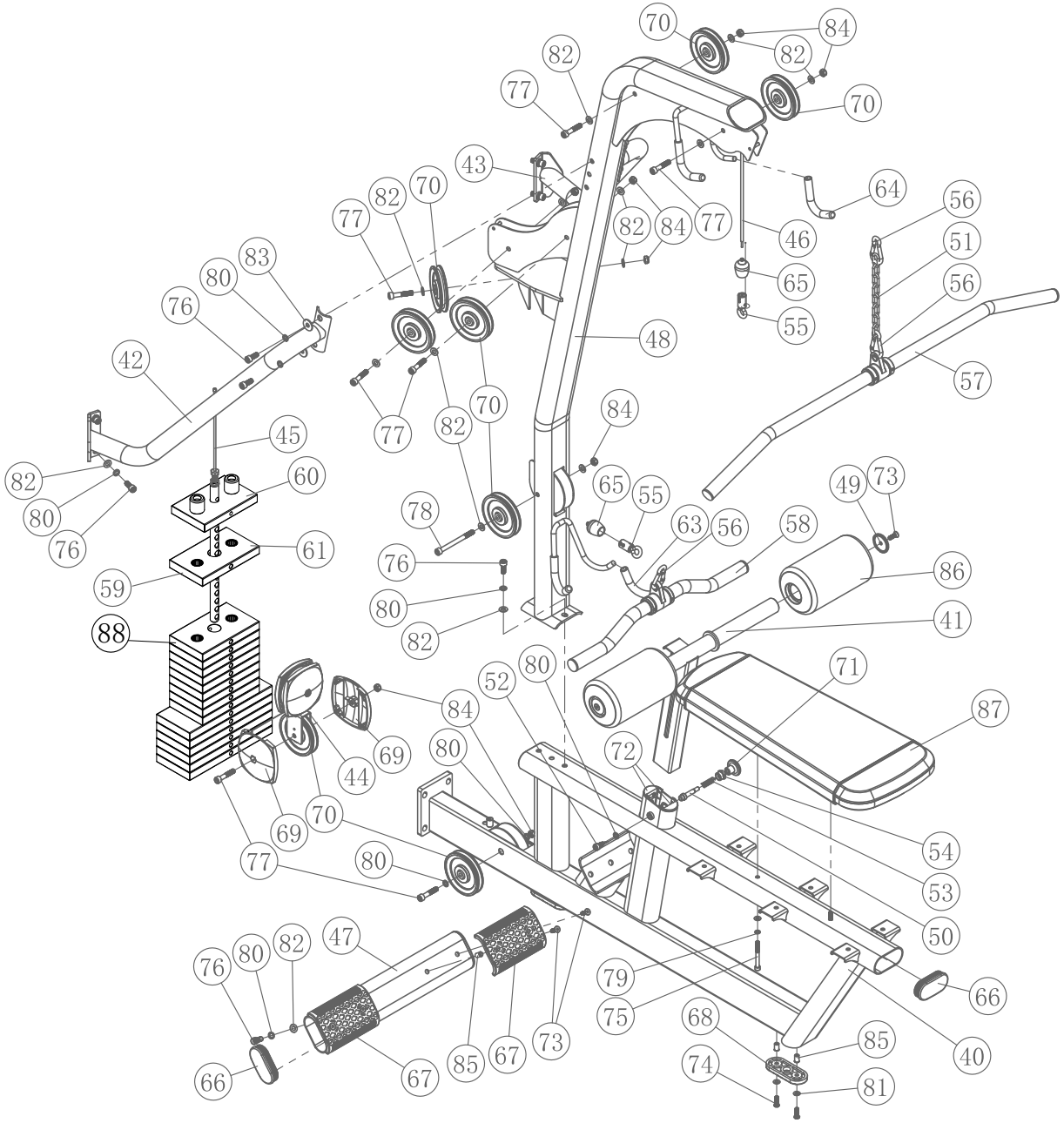

WARRANTY - LIGHT COMMERCIAL

Effective September 13, 2023- **CSD-LAT PULLDOWN / SEATED ROW LIMITED WARRANTY**

Spirit Fitness warrants the unit for a period of time listed below from the date of installation, as determined by sale receipt, or in the absence of a sales receipt eighteen (18) months from the original factory shipping date. Spirit Fitness' responsibilities include providing new or remanufactured parts, at Spirit Fitness' option, and technical support to our independent dealers and servicing organizations. In the absence of a dealer or service organization, these warranties will be administered by Spirit Fitness directly. The warranty period applies to the following components:

	10 Years	5 Years	1 Year	6 Months
Light Commercial Warranty	Frame / Welds / Cams / Plates	Bushings / Bearings / Shocks / Pulleys / Guide Rods	Paint & Finishes / Cables / Grips / Counter-Timer / Pull Pin Components / Rails Wheels / Attachments / All other parts / Labor	Upholstery

NORMAL RESPONSIBILITIES OF THE FACILITY

THE FACILITY IS RESPONSIBLE FOR THE ITEMS LISTED BELOW:

1. The warranty registration must be completed online within 10 days of the delivery date to validate the manufacturer's limited warranty.
2. Proper use of the fitness equipment in accordance with the instructions provided in this manual.
3. Expenses for making the fitness equipment accessible for servicing, including any item that was not part of the fitness equipment at the time it was shipped from the factory.
4. Damages to the fitness equipment finish during shipping, installation or following installation.
5. Routine maintenance of this unit as specified in this manual.

WARRANTY - CONTINUED

EXCLUSIONS

This warranty does not cover the following:

1. CONSEQUENTIAL, COLLATERAL, OR INCIDENTAL DAMAGES SUCH AS PROPERTY DAMAGE AND INCIDENTAL EXPENSES RESULTING FROM ANY BREACH OF THIS WRITTEN OR ANY IMPLIED WARRANTY. NOTE: Some states do not allow the exclusion or limitation of incidental or consequential damages, so this limitation or exclusion may not apply to you.
2. Service call reimbursement to the facility. Service call reimbursement to the dealer that does not involve malfunction or defects in workmanship or material, for units that are beyond the warranty period, for units that are beyond the service call reimbursement period, for fitness equipment not requiring component replacement, or fitness equipment not in non-dues paying facility or household use.
3. Damages caused by services performed by persons other than authorized Spirit Fitness service companies; use of parts other than original Spirit Fitness parts; or external causes such as corrosion, discoloration of paint or plastic, alterations, modifications, abuse, misuse, accident, improper maintenance, inadequate power supply, or acts of God.
4. Products with original serial numbers that have been removed or altered.
5. Products that have been: sold, transferred, bartered, or given to a third party.
6. Products that do not have a warranty registration on file at Spirit Fitness. Spirit Fitness reserves the right to request proof of purchase if no warranty record exists for the product.
7. THIS WARRANTY IS EXPRESSLY IN LIEU OF ALL OTHER WARRANTIES EXPRESSED OR IMPLIED, INCLUDING THE WARRANTIES OF MERCHANTABILITY AND/OR FITNESS FOR A PARTICULAR PURPOSE.
8. Product used in prisons and correctional facilities.

Warranties outside of the United States may vary. Please contact your local dealer for details.

WARRANTY - CONTINUED

SERVICE

Twelve (12) months from the date of installation or eighteen (18) months from the date of factory shipping as determined by the serial number establishes the labor warranty period should service be required. If service is performed, it is in your best interest to obtain and keep all receipts. This written warranty gives you specific legal rights. You may also have other rights that vary from state to state. Service under this warranty must be obtained by following these steps, in order:

1. Contact your selling authorized Spirit Fitness dealer. OR
2. Contact your local authorized Spirit Fitness service organization.
3. If there is a question as to where to obtain service, contact our service department at (870) 935-1107.
4. Spirit Fitness' obligation under this warranty is limited to repairing or replacing, at Spirit Fitness' option, the product through one of our authorized service centers. All repairs must be preauthorized by Spirit Fitness.
5. The owner is responsible for adequate packaging upon return to Spirit Fitness. Spirit Fitness is not responsible for damages in shipping. Make all freight damage claims with the appropriate freight carrier. DO NOT SHIP ANY UNIT TO OUR FACTORY WITHOUT A RETURN AUTHORIZATION NUMBER. All units arriving without a return authorization number will be refused.
6. For any further information, or to contact our service department by mail, send your correspondence to:

SPIRIT FITNESS, INC.
P.O. Box 2037
Jonesboro, AR 72402-2037

Product features or specifications as described or illustrated are subject to change without notice. All warranties are made by Spirit Manufacturing, Inc.
This warranty applies only in the 48 contiguous United States. NOTE: This does not apply to Alaska or Hawaii.

TROUBLESHOOTING

Service Checklist Diagnosis Guide

Problem	Solution/ Cause
Rep Counter & Timer does not turn on when weight is lifted	▪ Replace batteries. ▪ Check the magnet is still in position and the reed switch is still positioned next to the magnet. ▪ Check connections at back of console for battery and switch assembly. ▪ Replace the console. ▪ NOTE: A console comes with the magnet and reed switch assembly.
Rep counter turns ON when you pick up the head plate but does not count reps.	• Make sure you are doing a full repetition. Magnet must go up past the counter reed switch and back down past it to count ONE repetition. • Check for broken or cut wires. If broken or cut wires found, replace the console. NOTE: Console includes all wiring.

3000 Nestle Road Jonesboro, AR 72401 | Phone: 800-258-8511 | Fax: 870-935-7611

©2023 All Rights Reserved.