Available At IRON COMPANY

SPIRIT

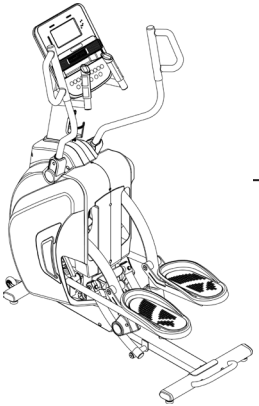

XS895 INCLINE STEPPER
OWNER'S MANUAL

TABLE OF CONTENTS

4 IMPORTANT SAFETY INSTRUCTIONS

5 IMPORTANT ELECTRICAL INSTRUCTIONS

7 IMPORTANT OPERATION INSTRUCTIONS

7 PRODUCT REGISTRATION

8 XS895 ASSEMBLY INSTRUCTIONS

14 CONSOLE OPERATION

21 PROGRAMMABLE FEATURES

32 USING HEART RATE TRANSMITTER

34 GENERAL MAINTENANCE

36 MANUFACTURER'S LIMITED WARRANTY

Thank you for purchasing our product, please save these instructions. Please do not perform or attempt any customizing, adjustments, repair or maintenance that is not described in this manual.

SPIRIT

Congratulations on your new Incline Stepper and welcome to the Spirit Fitness family!

Thank you for your purchase of this quality Incline Stepper from Spirit Fitness. Your new Incline Stepper was manufactured by one of the leading fitness manufacturers in the world and is backed by one of the most comprehensive warranties available. Through your dealer, Spirit Fitness will do all we can to make your ownership experience as pleasant as possible for many years to come. If not purchased direct from Spirit Fitness, the local dealership where you purchased this Incline Stepper is your administrator for all Spirit Fitness warranty and service needs. Their responsibility is to provide you with the technical knowledge and service personnel to make your experience more informed and any difficulties easier to remedy.

Please take a moment at this time to record the name of the dealer, their telephone number, and the date of purchase below to make any future, needed contact easy. We appreciate your support and we will always remember that you are the reason that we are in business.

Yours in Health,
Spirit Fitness

NAME OF DEALER _____

DEALER PHONE # _____

PURCHASE DATE _____

Important Safety Instructions

⚠WARNING

When using an electrical appliance, basic precautions should always be followed, including the following:
Read all instructions before using this appliance.
DANGER - To reduce the risk of electric shock:
Always unplug this appliance from the electrical outlet immediately after using and before cleaning and/or service work..
WARNING - To reduce the risk of burns, fire, electric shock, or injury to persons, install the Incline Stepper on a flat level surface with access to a 120-volt, 15-amp grounded outlet with only the Incline Stepper plugged into the circuit.

DO NOT USE AN EXTENSION CORD UNLESS IT IS A 14AWG OR BETTER, WITH ONLY ONE OUTLET ON THE END:

- To reduce the risk of burns, fire electric shock, or injury to persons:
- An appliance should never be left unattended when plugged in. Unplug from outlet when not in use, and before putting on or taking off parts.
- Do not operate under blanket or pillow. Excessive heating can occur and cause fire, electric shock, or injury to persons.
- Close supervision is necessary when this appliance is used by, on, or near children, invalids, or disabled persons.
- Use this appliance only for its intended use as described in this manual. Do not use attachments not recommended by the manufacturer.
- Never operate this appliance if it has a damaged cord or plug, if it is not working properly, if it has been dropped or damaged, or dropped into water. Return the appliance to a service center for examination and repair.
- Do not drag this appliance by supply cord or use cord as a handle.
- Keep the cord away from heated surfaces.
- Never operate the appliance with the air openings blocked. Keep the air openings free of lint, hair, and the like.
- Never drop or insert any object into any opening.
- Do not use outdoors.
- Do not operate where aerosol (spray) products are being use or where oxygen is being administered.
- The appliance is intended for household use.
- This exercise equipment is not intended for use by persons with reduced physical, sensory or mental capabilities, or lack of experience and knowledge.
- Keep children under the age of 13 away from this machine.

⚠ WARNING: This product can expose you to chemicals including Toluene and Acrylamide which are known to the State of California to cause cancer and birth defects or other reproductive harm.
For more information go to www.P65Warnings.ca.gov

SAVE THESE INSTRUCTIONS - THINK SAFETY!

Fitness Equipment Safety Instructions

To disconnect turn all controls to the off position, then remove the plug from the outlet.

- Do not operate equipment on deeply padded, plush or shag carpet. Damage to both carpet and equipment may result.
- Before beginning this or any exercise program, consult a physician. This is especially important for persons over the age of 35 or persons with pre-existing health conditions.
- Do not attempt to use your equipment for any purpose other than for the purpose it is intended.
- Keep hands away from all moving parts.
- The pulse sensors are not medical devices. Their purpose is to provide you with an approximate measurement in relation to your target heart rate. Various factors, including the user's movement, may affect the accuracy of heart rate readings. The pulse sensors are intended only as exercise aids in determining heart rate trends in general.
- Wear proper shoes. High heels, dress shoes, sandals or bare feet are not suitable for use on your equipment. Quality athletic shoes are recommended to avoid leg fatigue.
- Weight Limit: 400 LBS

Failure to follow all guidelines may compromise the effectiveness of the exercise experience, expose yourself (and possibly others) to injury, and reduce the longevity of the equipment.

Important Electrical Instructions

⚠WARNING

NEVER remove any cover without first disconnecting AC power. If voltage varies by ten percent (10%) or more, the performance of your Incline Stepper may be affected. Such conditions are not covered under your warranty. If you suspect the voltage is low, contact your local power company or a licensed electrician for proper testing.
NEVER expose this Incline Stepper to rain or moisture. This product is NOT designed for use outdoors, near a pool or spa, or in any other high humidity environment. The operating temperature specification is 40 to 120 degrees

Fahrenheit, and humidity is 95% non-condensing (no water drops forming on surfaces).

Circuit Breakers: Some circuit breakers used in homes are not rated for high inrush currents that can occur when a Incline Stepper is first turned on or even during use. If your Incline Stepper is tripping the house circuit breaker (even though it is the proper current rating) but the circuit breaker on the Incline Stepper itself does not trip, you will need to replace the home breaker with a high inrush type. This is not a warranty defect. This is a condition we as a manufacture have no ability to control. This part is available through most electrical supply stores. *Examples: Grainger part # 1D237, or available online at www.squared.com part #Q0120HM. The electrical outlet used should have a dedicated 15 amp circuit breaker.*

Grounding Instructions

This product must be grounded. If the Incline Stepper should malfunction or breakdown, grounding provides a path of least resistance for electric current, reducing the risk of electric shock. This product is equipped with a cord having an equipment-grounding plug. The plug must be plugged into an appropriate outlet that is properly installed and grounded in accordance with all local codes and ordinances.

DANGER - Improper connection of the equipment-grounding conductor can result in a risk of electric shock. Check with a qualified electrician or serviceman if you are in doubt as to whether the product is properly grounded. Do not modify the plug provided with the product if it will not fit the outlet; have a proper outlet installed by a qualified electrician.

This product is for use on a nominal 110-volt/15 amp dedicated circuit, and has a grounding plug that looks like the plug illustrated below. A temporary adapter that looks like the adapter illustrated below may be used to connect this plug to a 2-pole receptacle as shown below if a properly grounded outlet is not available. The temporary adapter should be used only until a properly grounded outlet, (shown below) can be installed by a qualified electrician. The green colored rigid ear-lug, or the like, extending from the adapter, must be connected to a permanent ground such as a properly grounded outlet box cover. Whenever the adapter is used, it must be held in place by a metal screw.

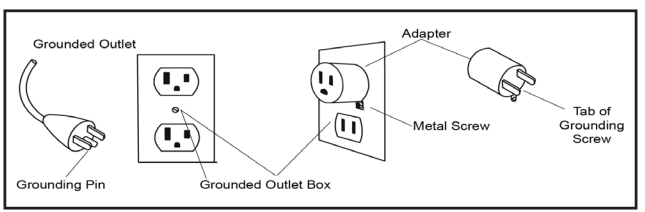

Important Operation Instructions

- NEVER operate this Incline stepper without reading and completely understanding the results of any operational change you request from the computer.
- Understand that changes in resistance and incline do not occur immediately. Set your desired resistance level on the computer console and release the adjustment key. The computer will obey the command gradually.
- NEVER use your Incline stepper during an electrical storm. Surges may occur in your household power supply that could damage Incline stepper components. Unplug the Incline stepper during an electrical storm as a precaution.
- Use caution while participating in other activities while using your Incline stepper; such as watching television, reading, etc. These distractions may cause you to lose balance; which may result in serious injury.
- Always hold on to a handle bar while making control changes (incline, level, etc.).
- Do not use excessive pressure on console control keys. They are precision set to function properly with little finger pressure. If you feel the buttons are not functioning properly with normal pressure contact your dealer.

Serial Number Location

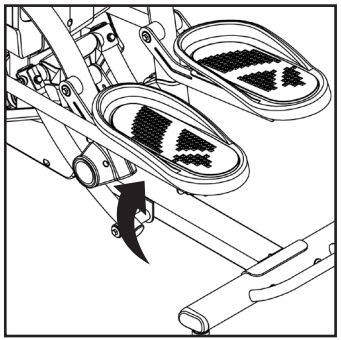

Record Your Serial Number

Please record the serial number of this fitness product in the space provided below.

Serial Number:

Register Your Purchase

The self-addressed product registration card must be completed in full and returned to Spirit Fitness. You can also go to www.spiritfitness.com/warranty under the Support tab to register online.

XS895 PRE ASSEMBLY

UNPACKING

1. Using a razor knife (Box Cutter), cut the banding straps that wrap around the carton. Reach under the bottom edge of the carton and pull it away from the cardboard underneath, separating the staples that join the two together. Lift the box over the unit and unpack.
2. Carefully remove all parts from carton and inspect for any damage or missing parts. If damaged parts are found, or parts are missing, contact your dealer immediately.
3. Locate the hardware package. The hardware is separated into four steps. Remove the tools first. Remove the hardware for each step as needed to avoid confusion. The numbers in the instructions that are in parenthesis (#) are the item number from the assembly drawing for reference.

TOOLS INCLUDED:

- ❑ Philips Head Screw Driver (#151)
- ❑ L Allen Wrench (#152)
- ❑ 13/14mm Wrench (#149)
- ❑ 12/14mm Wrench (#150)

PARTS INCLUDED:

- ❑ 1 Main Shroud
- ❑ 1 Console Mast
- ❑ 1 Console Mast Cover
- ❑ 2 Swing Arms
- ❑ 1 Water Bottle Holder
- ❑ 4 Levelers
- ❑ 1 Console
- ❑ 2 Foot Pedals
- ❑ 1 Power Cord
- ❑ 1 Audio Cable
- ❑ 2 Transport Wheels
- ❑ 1 Hardware Kit

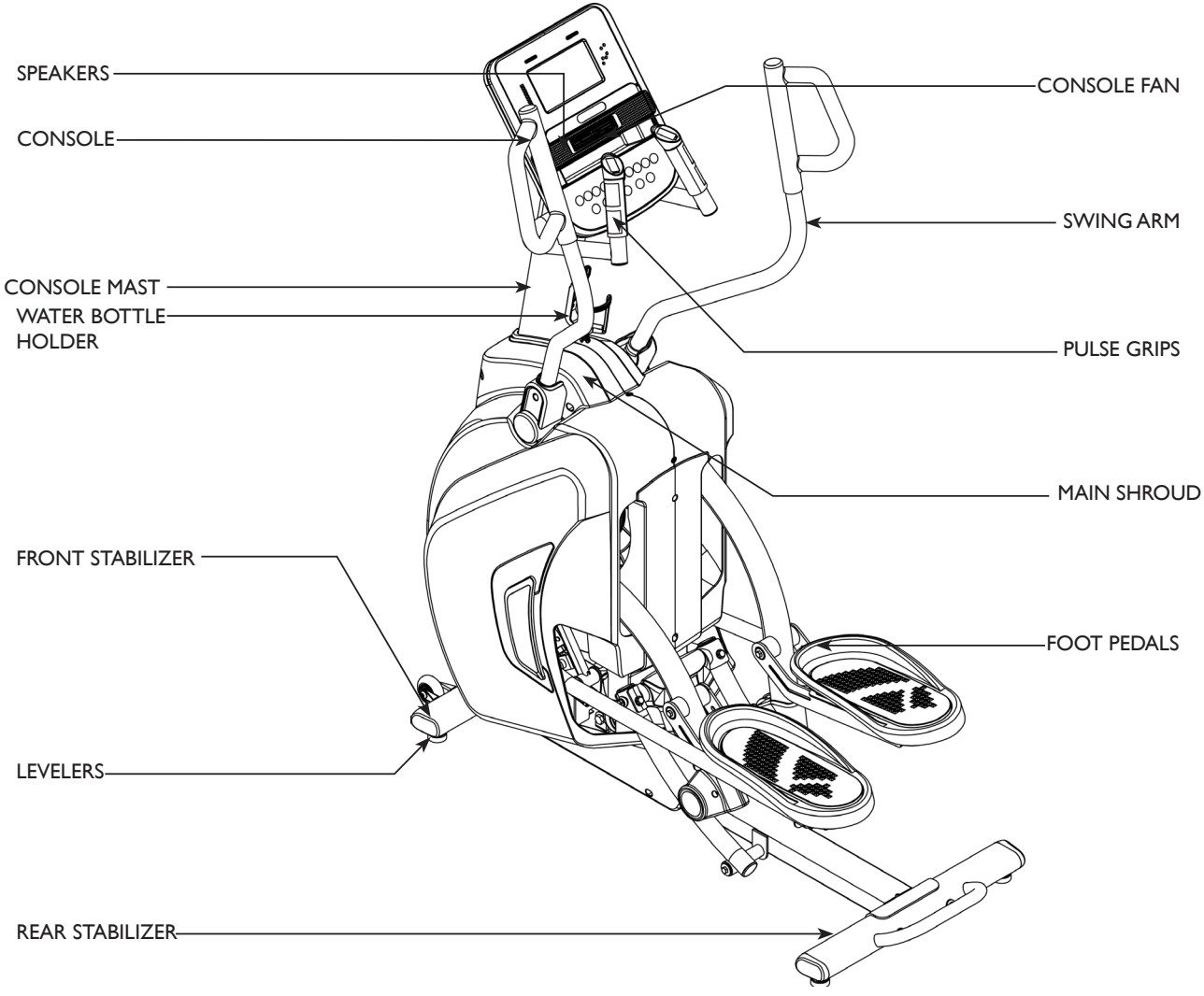
SPEAKERS
CONSOLE
CONSOLE MAST
WATER BOTTLE HOLDER
FRONT STABILIZER
LEVELERS
REAR STABILIZER
CONSOLE FAN
SWING ARM
PULSE GRIPS
MAIN SHROUD
FOOT PEDALS

XS895 STEP ONE

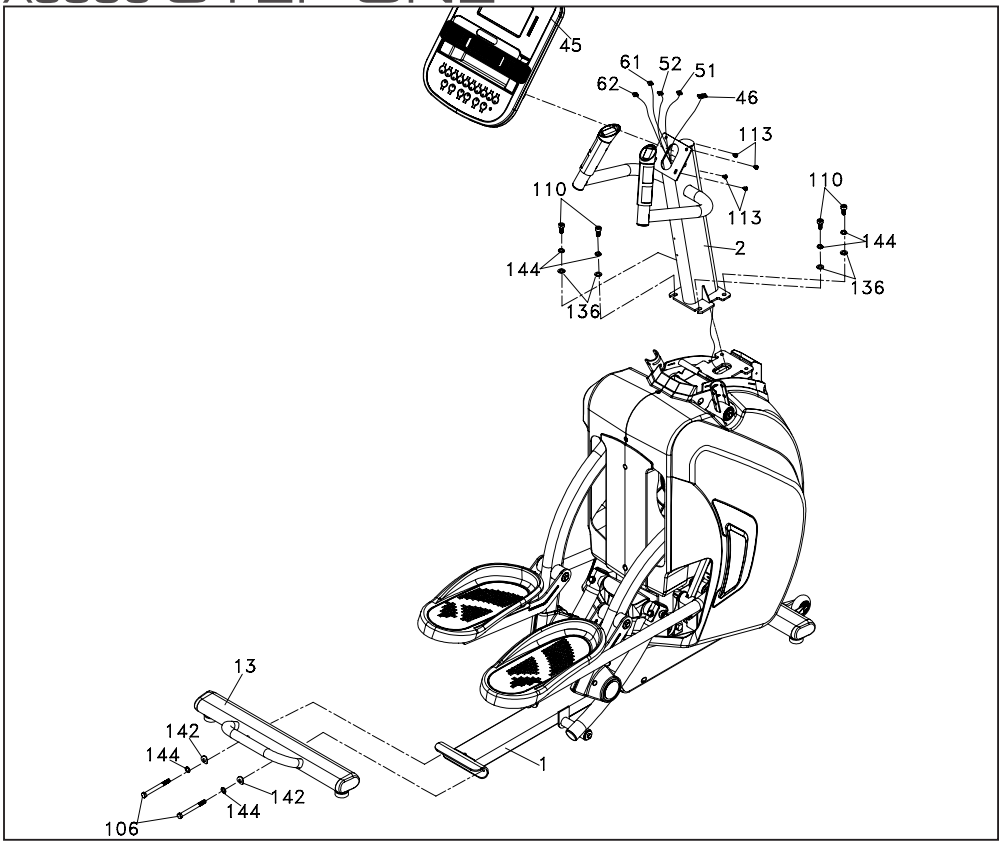

HARDWARE FOR STEP 1			
PART	TYPE	DESCRIPTION	QTY
106	BOLT	3/8" × 3-3/4"	2
144	WASHER	Ø10 × 2T	6
142	WASHER	3/8" x 23 x 2.0T	2
110	BOLT	3/8" × 3/4"	4
136	WASHER	Ø3/8" × Ø19 × 1.5T	4
113	SCREW	M5 × 10m/m	4

1. Gather **HARDWARE FOR STEP 1**.
2. Attach **Rear Stabilizer** with **Handle (13)** to mounting plate on the main frame and secure with 2 **Hex Head Bolts (106)**, 2 **Split Washers (144)** and **Curved Washers (142)** by using **13/14m/m Wrench (149)**.
3. Pull the tie on **Computer Cable (2)** to have **Computer Cable (46)** go through the mast from bottom and out of the mast on top. Secure the **Console Mast** on the mounting plate on the Main Frame with 4 **Socket Head Cap Bolts(110)**, 4 **Split Washers (144)** and 4 **Flat Washers (136)** by using **L Allen Wrench (152)**.
   NOTE: DO NOT PINCH CABLE, AS THIS MAY CAUSE MALFUNCTIONS.
4. Take off the tie from **Computer Cable (46)** and plug in onto the **Console Assembly (45)** together with two **Hand pulse Assembly (51,52)** and **Resistance/ Incline (White/Red)(61,62)** cables.
5. Place the Console on the mounting plate of the **Console Mast** and secure with 4 **Phillips Head Screws (113)** by using **Phillips Head Screw Driver (151)**

XS895 STEP TWO

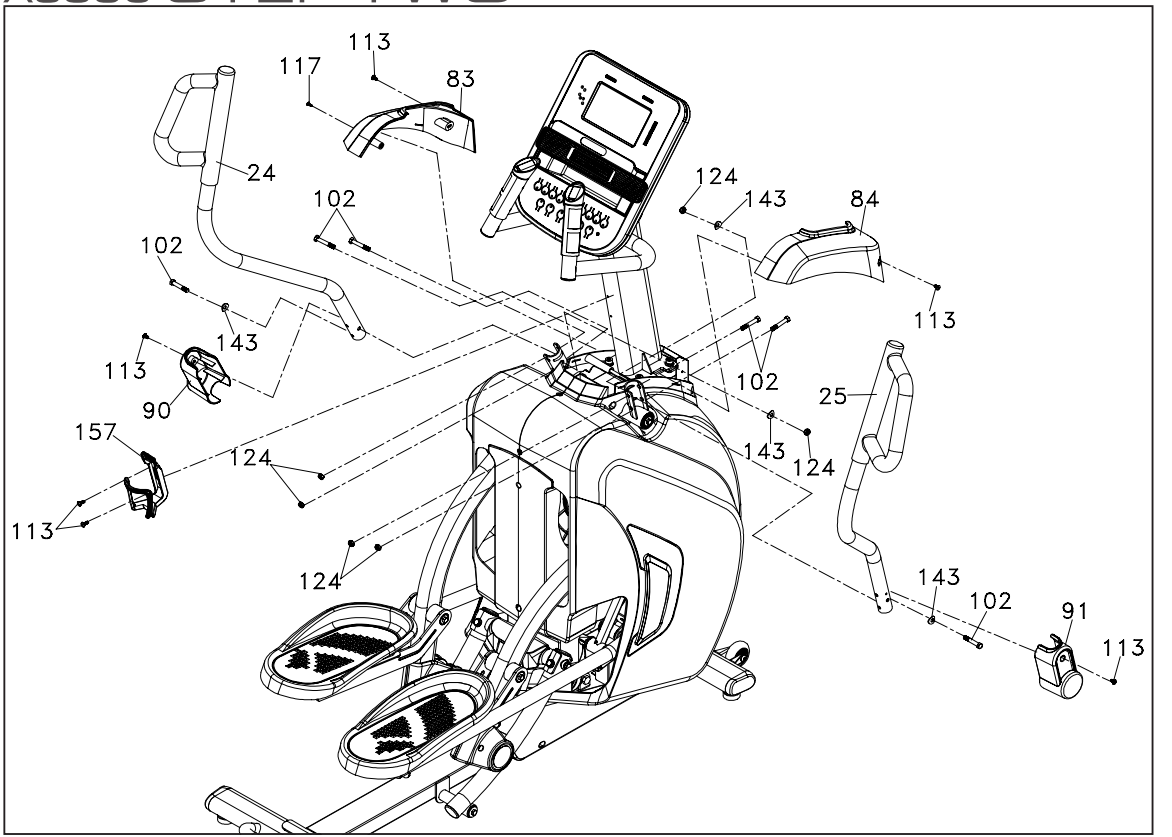

HARDWARE FOR STEP 2			
PART	**TYPE**	**DESCRIPTION**	**QTY**
117	SCREWS	3.5 × 16L	1
113	SCREWS	M5 × 10m/m	6
102	BOLT	5/16" × 1-3/4"	6
143	CURVED WASHER	5/16" × 19 × 1.5T	4
124	NYLOC NUTS	5/16" X 7T	6

1. Gather **HARDWARE FOR STEP 2**.
2. Match **Left Console Mast Cover (83)** with **Right Console Mast Cover (84)** on top of left and right **Chain Covers** and around the **Console Mast** and secure with 1 **Sheet Metal Screws** (117) and 2 **Phillips Head Screw (113)** by using **Phillips Head Screw Driver (151)**
3. Attach **Upper Handle Bar (L) (24)** to the mounting plates on **Left Lower Handle Bar (17)** and secure with 3 **Hex Head Bolts (102)**, 2 **Curved Washers (143)** and 3 **Nyloc Nuts (124)** by using 12/14m/m **Wrench (150)** and 13/14m/m **Wrench (149)**. Use same way with same quantity of bolts to secure **Upper Handle Bar (R) (25)** onto the mounting plates on **Right Lower Handle Bar (18)**.
4. Install **Left Handle Bar Cover (90)** on **Left Lower Handle Bar** and secure with 2 **Phillips Head Screws (113)** by using **Phillips Head Screw Driver (151)**. Use same way with same quantity of bolts to secure **Right Handle Bar Cover (91)** on **Upper Right Handgrip** and on **Right Lower Handle Bar**.
5. Install **Drink Bottle Holder (157)** on **Console Mast** with 2 **Phillips Head Screws (113)** using the **Screw Driver (151)**.

XS895 CONSOLE OPERATION

POWER

When power is connected to the Incline stepper the console will automatically power up. These models are connected directly to 120-volt, 15-amp and there is a power switch located where the line cord plugs into the unit on the left side near the middle.

When it is first powered on, the console will perform an internal self-test. During this time all the lights will turn on, the Message Window display will show a software version (i.e.: VER 1.0), and the VERTICAL Window will display an altimeter reading. The Time Window shows how many total hours the Incline stepper has been used.

The altimeter and time will remain displayed for only a few seconds then the console will go to the start up display. The dot matrix display will be scrolling through the different profiles of the programs and the Message Center will be scrolling the start up message. You may now begin to use the console.

Dot Matrix Center Display

Twenty columns of boxes (10 high) indicate each segment of a workout. The boxes only show an approximate level (resistance) of effort. They do not necessarily indicate a specific value - only an approximate percent to compare levels of intensity. In Manual Operation the resistance dot matrix window will build a profile "picture" as values are changed during a workout.

The Lap track will move in a counterclockwise direction.

1/4 Mile Track

The 1/4-mile track (one lap) will be displayed around the dot matrix window. The flashing segment indicates your progress. Once the 1/4-mile (Metric - 0.4k) is complete this feature will begin again. There is a lap counter in the message window for monitoring your distance.

Pulse Grip Feature

The Pulse (Heart Rate) window will display your current heart rate in beats per minute during the workout. You must use both stainless steel sensors on the stationary grips or the heart rate transmitter chest strap to display your pulse. Pulse value displays anytime the upper display is receiving a Pulse signal. You may not use the Pulse Grip feature while in Heart Rate Programs.

Calorie Display

Displays the cumulative calories burned at any given time during your workout.
Note: This is only a rough guide used for comparison of different exercise sessions, and is not to be used for medical purposes.

Speakers

The console has built-in Speakers and an audio input jack. There is no volume control on the console. The volume must be controlled on the Audio Source.

Quick Start

This is the quickest way to start a workout. After the console powers up you just press the **Start**

key to begin, this will initiate the Quick Start mode. In Quick Start the Time will count up from zero and the workload may be adjusted manually by pressing the **Level +/- buttons**. The dot matrix display will have only the bottom row lit at first. As you increase the work load more rows will light indicating a harder workout. The Incline Stepper will get harder to pedal as the rows increase.

There are 20 levels of resistance available for plenty of variety. The first 5 levels are very easy workloads and the changes between levels are set to a good progression for de-conditioned users. Levels 6-10 are more challenging, but the increases in resistance from one level to the next remain small. Levels 11-15 start getting tough as the levels jump more dramatically. Levels 16-20 are extremely hard and are good for short interval peaks and elite athletic training.

Basic Information

The Message Center will initially be displaying the Program name. When in scan mode during a program, FPM(floors per minute) will be displayed for four seconds, then move on and display FLOORS. The data changes to Laps completed, Segment time, SCAN. Pressing the **Enter** key again will bring you back to the beginning.

The **Stop** key actually has several functions. Pressing the **Stop** key once during a program will pause the program for 5 minutes. If you need to get a drink, answer the phone or any of the many things that could interrupt your workout, this is a great feature. To resume your workout during Pause, just press the **Start** key. If the **Stop** key is pressed twice during a workout, the program will end and the console will display your Workout Summary (Total time, Avg. fpm, total floors, Avg. HR, total Laps). If the **Stop** key is held down for 3 seconds or a third time during the program, the console will perform a complete **Reset**. During data entry for a program the **Stop** key performs a

previous screen or segment function. This allows you to go back to change programming data.

Program Keys

The program keys are used to preview each program. When you first turn the console on you may press each program key to preview what the program profile looks like. If you decide that you want to try a program, press the corresponding program key and then press the **Enter** key to select the program and enter into the data-setting mode.

The Incline Stepper has a built in heart rate monitoring system. Simply grasping the hand pulse sensors on the stationary handle bars or wearing the heart rate transmitter (see Using Heart Rate Transmitter section) will start the Heart Icon blinking (this may take a few seconds). The Pulse Display Window will display your heart rate, or Pulse in beats per minute.

The console includes a built-in fan to help keep you cool. To turn the fan on, press the key on the left side of the console.

Muscle Activation Figure

There is an anatomical figure located at the top of the console. This figure will light all areas that are activated when using the elliptical trainer. These will light up during any of the programs. You can control which muscles are activated by customizing the resistance profile during the set up phase of console programming. If you accept the default program profile, the selected program will determine which muscles will be activated by automatically adjusting the resistance. Generally the following guidelines hold true:

- The upper body LED's will activate when you are either holding onto the swing arms or at anytime your hands

aren't onto the pulse grip sensors.

- The lower body lights will activate in three degrees of engagement: Green represents minimal muscle involvement, Amber represents medium involvement, and red represents full or heavy activation.
- Levels 0-7.5 Incline: Amber - Gluteals and Quadriceps light up; Green - Hamstrings and Calves light up.
- Levels 8-20 Incline: Red – Gluteals light up, Amber – Quadriceps light up, Green – Hamstrings and Calves Light up.

Heart Rate % Profile

The console LCD screen will display your current heart rate anytime a pulse is detected. The Bar Graph, located to the right of the LCD screen, will show your current heart rate % in relation to your projected maximum heart rate, which is determined by your age that you entered during the programming phase of any of the 10 programs. The significance of the bar graph colors are as follows:

- 50-60% of maximum is Amber
- 65-80% of maximum is Amber and Green
- 85-90% or more is Amber, Green, and Red

Programming The Console

Each of the programs can be customized with your personal information and changed to suit your needs. Some of the information is necessary to ensure the readouts are correct. You will be asked for your Age and Weight. Entering your Age is necessary during the Heart Rate programs to ensure the correct predicted target heart rate zone. Entering your Weight aides in calculating a more correct Calorie reading. Although we cannot provide an exact calorie count, we do want to be as close as possible.

CALORIE NOTE: Calorie readings on every piece of exercise equipment, whether it is in a gym or at home, are not accurate and tend to vary widely. They are meant only as a guide to monitor your progress from workout to workout. The only way to measure your calorie burn accurately is in a clinical setting connected to a host of machines. This is

because every person is different and burns calories at a different rate. Some good news is that you will continue to burn calories at an accelerated rate for at least an hour after you have finished exercising!

Entering A Program And Changing Settings

When you enter a program, by pressing a program key, then **Enter** key, you have the option of entering your own personal settings. If you want to workout without entering new settings, then just press the **Start** key. This will bypass the programming of data and take you directly to the start of your workout. If you want to change the personal settings then just follow the instructions in the Message Center. If you start a program without changing the settings, the default or saved settings will be used.

NOTE: Age and Weight default settings will change when you enter a new number. So the last Age and Weight entered will be saved as the new default settings. If you enter your Age and Weight the first time you use the Incline Stepper, you will not have to enter it every time you work out unless either your Age or Weight changes, or someone else enters a different Age and Weight.

Programmable Features
Manual

The Manual program works as the name implies, manually. This means that you control the workload and not the computer. To start the Manual program, follow the instructions below or just press the **Start** key.

1. Press the **Manual** key, then press the **Enter** key.
2. The Message Center will ask you to enter your Age. You may enter your age, using the **Up**/**Down** keys, then press the **Enter** key to accept the new value and proceed on to the next screen.
3. You are now asked to enter your Weight. You may adjust the Weight value using the **Up**/**Down** keys, then press **Enter** to continue.
4. Next is Time. You may adjust the Time and press **Enter** to continue.
5. Now you are finished editing the settings and can begin your workout by pressing the **Start** key. You can also go back and modify your settings by pressing the **Enter** key.
6. Once the program starts you will be at level one. This is the easiest level and it is a good idea to stay at level one for a while to warm up. If you want to increase the work load at any time press the **Up** key; the **Down** key will decrease the work-load.
7. During the Manual program you will be able to scroll through the data in the Message Center by pressing the **Enter** key.
8. When the program ends you may press **Start** to begin the same program again or **Stop** to exit the program or you can save the program you just completed as a custom user program by pressing a **User** key and following the instructions in the Message Center.

Programming Preset Programs

1. Select the desired program key then press the **Enter** key.
2. The Message Center will ask you to enter your Age. You may adjust the age setting, using the **Level +/-** keys, then

press the **Enter** key to accept the new number and proceed on to the next screen.

3. You are now asked to enter your Weight. You may adjust the Weight value using the **Level +/-** keys, then press **Enter** to continue.
4. Next is Time. You may adjust the time and press **Enter** to continue.
5. Now you are asked to adjust the Max Resistance Level. This is the peak exertion level you will experience during the program. Adjust the level and then press **Enter**.
6. Now you are asked to adjust the Incline on/off. Adjust the Incline on/off and then press **Enter**.
7. During the program you will be able to scroll through the data in the message window by pressing the **Enter** key. When the program ends the Message Center will show a summary of your workout. The summary will be displayed for a short time, then the console will return to the start-up display.

Custom User Defined Programs

There are two customizable User programs that allow you to build and save your own workout. The two programs, **User 1** and **User 2**, operate exactly the same way so there is no reason to describe them separately. You can build your own custom program by following the instructions below or you can save any other preset program you complete as a custom program. Both programs allow you to further personalize it by adding your name.

1. Press the **User 1** or **User 2** key. The Message Center will show a welcome message. If you had previously saved a program the message will contain your name. Then press the **Enter** key to begin programming.
2. If you have already saved a program to either **U1** or **U2**, it will be displayed and you are ready to begin. If not, you will have the option of inputting a username. In the **Message Window,** the letter "A" will be blinking. Use the **Level +/- buttons** to select the appropriate first letter of your name (pressing the up button will switch to the letter "B"; pressing the Down button will switch to letter "Z"). Press **Enter** when the desired letter is displayed. Repeat this process until all of the characters of your name have been programmed (maximum 7 characters). When finished press **Stop**.
3. If there is a program already stored in **User** when you press the key, you will have an option to run the program as

it is or delete the program and build a new one. At the welcome message screen, when pressing **Start** or **Enter** you will be prompted: Run Program? Use the **Level +/- arrows** to select Yes or No. If you select No, you will then be asked if you want to delete the currently saved program. It is necessary to delete the current program if you want to build a new one.

4. The Message Center will ask you to enter your Age. You may enter your age, using the **Level +/- keys,** then press the **Enter** key to accept the new value and proceed on to the next screen.
5. You are now asked to enter your Weight. You may adjust the weight value using the **Level +/- keys** or the numeric key pad, then press **Enter** to continue.
6. Next is Time. You may adjust the time and press **Enter** to continue.
7. Now you are asked to adjust the Max Resistance Level of the program, press **Enter** when resistance has been selected.
8. Now the first column will be blinking and you are asked to adjust the resistance level for the first segment (SEGMENT > 1) of the workout by using the **Level Up key**. When you finish adjusting the first segment, or if you don't want to change, then press **Enter** to continue to the next segment.
9. The next segment will show the same workload resistance level as the previously adjusted segment. Repeat the same process as the last segment then press **Enter**. Continue this process until all twenty segments have been set.
10. Now you are asked to adjust the stride Level the first column will be blinking and you are asked to adjust the stride level for the first segment (SEGMENT > 1) of the workout by using the **Level +/- keys**. When you finish adjusting the first segment, or if you don't want to change, then press **Enter** to continue to the next segment.
11. The next segment will show the same workload stride level as the previously adjusted segment. Repeat the same process as the last segment then press **Enter**. Continue this process until all twenty segments have been set.
12. The Message Center will then tell you to press **Enter** to save the program. After saving the program the Message Center says "PROG SAVED" then will give you the option to Start or modify the program. Pressing **Stop** will exit to the start up screen.

Preset Programs

The Incline Stepper has five different programs that have been designed for a variety of workouts.

These five programs have factory preset work level profiles for achieving different goals.

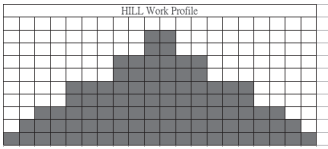

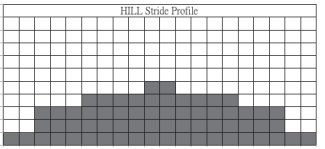

HILL

This program follows a triangle or pyramid type of gradual progression from approximately 10% of maximum effort (the level that you chose before starting this program) up to a maximum effort which lasts for 10% of the total workout time, then a gradual regression of resistance back to approximately 10% of maximum effort. Incline: The pedal elevation is a more gradual and sustained progression. Maximum elevation is in the middle of the workout and lasts for 10% of the duration.

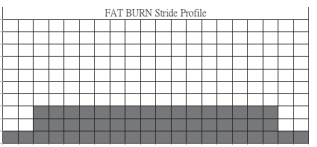

FAT BURN

This program follows a quick progression up to the maximum resistance level (default or user input level) that is sustained for 2/3 of the workout. This program will challenge your ability to sustain your energy output for an extended period of time. Incline: The pedal elevation is a quick and sustained progression up to the maximum value (default or user input) for 90% of the workout duration.

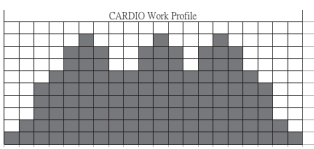

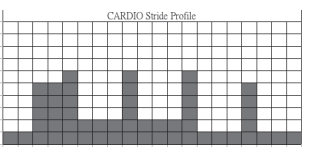

CARDIO

This program presents a quick progression up to near maximum resistance level (default or user input level). It has slight fluctuations up and down to allow your heart rate to elevate, and then recover repeatedly, before beginning a quick cool down. This will build up your heart muscle and increase blood flow and lung capacity
Incline: The elevation in this program is moderate. There are several elevation spikes at different points of the workout. Segments 4, 9, and 14 are maximum elevation for this program.

STRENGTH

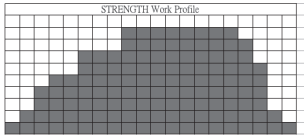

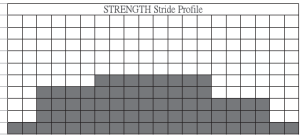

This program has a gradual progression of resistance up to 100% of maximum effort that is sustained for 25% of workout duration. This will help build strength and muscular endurance in the lower body and glutes. A brief cool down follows. Incline: There is a quick climb to a moderate, sustained elevation that lasts the majority of the workout length.

INTERVAL

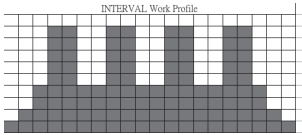

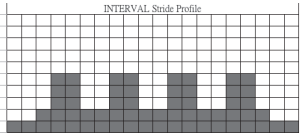

This program takes you through high levels of intensity followed by recovery periods of low intensity. This program utilizes and develops your "Fast Twitch" muscle fibers which are used when performing tasks that are intense and short in duration. These deplete your oxygen level and spike your heart rate, followed by periods of recovery and heart rate drop to replenish oxygen. Your cardiovascular system gets programmed to use oxygen more efficiently. Incline: This program will spike similar to the resistance profile, but in different segments (columns); this means that all of your lower extremity muscles will be equally challenged throughout this program. The incline alternates between 25 & 65 % of maximum elevation.

Heart Rate Programs

The old motto, "no pain, no gain", is a myth that has been overpowered by the benefits of exercising comfortably. A great deal of this success has been promoted by the use of heart rate monitors. With the proper use of a heart rate monitor, many people find that their usual choice of exercise intensity was either too high or too low and exercise is much more enjoyable by maintaining their heart rate in the desired benefit range.

To determine the benefit range in which you wish to train, you must first determine your Maximum Heart Rate. This can be accomplished by using the following formula: 220 minus your age. This will give you the Maximum Heart Rate (MHR)for someone of your age. To determine the effective heart rate range for specific goals you simply calculate a percentage of your MHR. Your Heart rate training zone is 50% to 90% of your maximum heart rate. 60% of your MHR is the recommended for burning fat while 80% is recommended for strengthening the cardio vascular system. This 60% to 80% is the zone to stay in for maximum benefit.

For someone who is 40 years old their
target heart rate zone is calculated:
220 – 40 = 180 (maximum heart rate)
180 x .6 = 108 beats per minute (60% of maximum)
180 X .8 = 144 beats per minute (80% of maximum)
So for a 40 year old the training zone would
be 108 to 144 beats per minute.

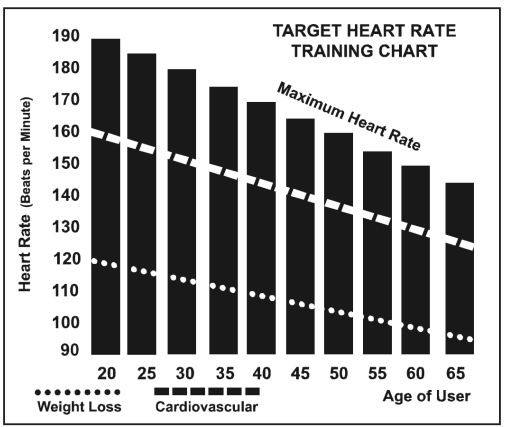

If you enter your age during programming the console will perform this calculation automatically. Entering your age is used for the Heart Rate programs. After calculating your MHR you can decide upon which goal you would like to pursue.

The two most popular reasons for, or goals, of exercise are cardiovascular fitness (training for the heart and lungs) and weight control. The black columns on the chart above represent the MHR for a person whose age is listed at the bottom of each column. The training heart rate, for either cardiovascular fitness or weight loss, is represented by two different lines that cut diagonally through the chart. A definition of the lines' goal is in the bottom left-hand corner of the chart. If your goal is cardiovascular fitness or if it is weight loss, it can be achieved by training at 80% or 60%, respectively, of your MHR on a schedule approved by your physician. Consult your physician before participating in any exercise program.

With all Spirit Fitness Heart Rate programs you may use the heart rate monitor feature without using the Heart Rate program. This function can be used during manual mode or during any of the nine different programs. The Heart Rate program automatically controls resistance at the pedals.

Rate of Perceived Exertion

Heart rate is important but listening to your body also has a lot of advantages. There are more variables involved in how hard you should workout than just heart rate. Your stress level, physical health, emotional health, temperature, humidity, the time of day, the last time you ate and what you ate, all contribute to the intensity at which you should workout. If you listen to your body, it will tell you all of these things.

The rate of perceived exertion (RPE), also know as the Borg scale, was developed by Swedish physiologist G.A.V. Borg. This scale rates exercise intensity from 6 to 20 depending upon how you feel or the perception of your effort.

The scale is as follows:
Rating Perception of Effort

6 Minimal	10 Very light +	14 Somewhat hard +	18 Very hard +
7 Very,very light	11 Fairly light	15 Hard	19 Very,very hard
8 Very,very light +	12 Comfortable	16 Hard +	20 Maximal
9 Very light	13 Somewhat hard	17 Very hard	

You can get an approximate heart rate level for each rating by simply adding a zero to each rating. For example a rating of 12 will result in an approximate heart rate of 120 beats per minute. Your RPE will vary depending up the factors discussed earlier. That is the major benefit of this type of training. If your body is strong and rested, you will feel strong and your pace will feel easier. When your body is in this condition, you are able to train harder and the RPE will support this. If you are feeling tired and sluggish, it is because your body needs a break. In this condition, your pace will feel harder. Again, this will show up in your RPE and you will train at the proper level for that day

USING THE SPIRIT APP

Using the Spirit Fit App

In order to help you achieve your exercise goals, your new exercise machine comes equipped with a Bluetooth® transceiver that will allow it to interact with selected phones or tablet computers via the Spirit Fit App.

Just download the free Spirit Fit App from the Apple Store or Google Play, and then follow the instructions in the App to sync with your exercise machine. Now you can view current workout data in three different Display screens on your device. You can also easily switch back and forth from the workout display view to internet/social media/email sites via icons on the display screen. When your workout is finished, the data is automatically saved to the built-in personal calendar for future reference.

The Spirit Fit App also allows you to sync your workout data with one of many fitness cloud sites we support with more to come.

Syncing the App with your exercise machine:

1. Download the App.
2. Open the App on your device (phone or tablet) and make sure Bluetooth® is enabled on your device (phone or tablet).
3. In the App click the icon in the top left corner to search for your Spirit equipment (shown right).

4. After the equipment is detected, click Connect. When the App and equipment are synced, the Bluetooth® icon on the equipment's console display will light up. You may now start using your new Spirit Fitness product.

5. When you workout is finished, the data is automatically saved and you will be prompted to sync your data with each available fitness cloud site. Please note you will have to download the applicable compatible fitness App in order for the icon to be active and available.

*Note: Your device will need to be running on a minimum operating system of iOs 7 or Android 4.4 for the Spirit Fit App to operate properly.

Heart Rate Program Operation

Note: You must wear the heart rate transmitter strap for these programs (sold separately).

Both programs operate the same, the only difference is that **HR1** is set to 60% and **HR2** is set to 80% of the maximum heart rate. They both are programmed the same way.

To start an HR program follow the instructions below or just select the **HR1** or **HR2** program, then the **Enter** key and follow the directions in the Message Center.

After selecting your heart rate target the program will attempt to keep you at or within 3-5 heart beats per minute of this value. Follow the prompts in the Message Center to maintain your selected heart rate value.

1. Press the **HR 1** or **HR 2** key then press the **Enter** key.
2. The Message Center will ask you to enter your Age. You may enter your age, using the **Level +/-** keys, then press

the **Enter** key to accept the new value and proceed on to the next screen.

3. You are now asked to enter your Weight. You may adjust the weight value using the **Level +/-** keys, then press **Enter** to continue.
4. Next is Time. You may adjust the time and press **Enter** to continue.
5. Now you are asked to adjust the Heart Rate Target. This is the heart rate level you will strive to maintain during the program. Adjust the level using the **Level +/-** keys, then press **Enter**. *Note:* The heart rate that appears is based on the % you accepted in Step 1. If you change this number it will either increase or decrease the % from Step 1.
6. Now you are finished editing the settings and can begin your workout by pressing the **Start** key. You can also go back and modify your settings by pressing the **Enter** key.
   Note: At any time during the editing of Data you can press the Enter key to go back one screen.
7. If you want to increase or decrease the workload at any time during the program press the **Level +/-** key. This will allow you to change your target heart rate at any time during the program.
8. During the HR 1 or HR 2 programs you will be able to scroll through the data in the Message Center by pressing the **Enter** key.
9. When the program ends you may press **Start** to begin the same program again or **Stop** to exit the program.

Wearing The Chest Strap (Sold Separately)

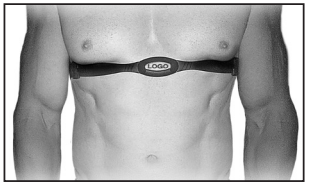

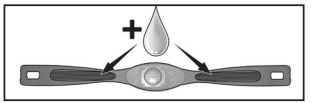

1. Attach the transmitter to the elastic strap using the interlocking key.
2. Adjust the strap as tightly as possible as long as the strap is not too tight to remain comfortable.
3. Position the transmitter with the logo centered in the middle of your torso facing away from your chest (some people must position the transmitter slightly left of center). Attach the final end of the elastic strap by inserting the round end and, using the locking parts, secure the transmitter and strap around your chest.
4. Position the transmitter directly below the pectoral muscles.
5. Sweat is the best conductor to measure very minute heart beat electrical signals. However, plain water can also be used to pre-wet the electrodes (2 ribbed oval areas on the reverse side of the belt and both sides of the transmitter). It's also recommended that you wear the transmitter strap a few minutes before your work out. Some users, because of body chemistry, have a more difficult time in achieving a strong, steady signal at the beginning. After "warming up", this problem lessens.
6. Your workout must be within range - distance between transmitter/receiver – to achieve a strong steady signal. The length of range may vary somewhat but generally stay close enough to the console to maintain good, strong, reliable readings. Wearing the transmitter directly on bare skin assures you of proper operation. If you wish, you may wear the transmitter over a shirt. To do so, wet the areas of the shirt that the electrodes will rest upon.

Note: The transmitter is automatically activated when it detects activity from the user's heart. Additionally, it automatically deactivates when it does not receive any activity. Although the transmitter is water resistant, moisture can have the effect of creating false signals, so you should take precautions to completely dry the transmitter after use to prolong battery life (estimated transmitter battery life is 2500 hours). The replacement battery is Panasonic CR2032.

Erratic Operation

Caution! Do not use this elliptical trainer for Heart Rate programs unless a steady, solid Actual Heart Rate value is being displayed. High, wild, random numbers being displayed indicate a problem.

Areas to look for interference which may cause erratic heart rate:

1. Microwave ovens, TV's, small appliances, etc.
2. Fluorescent lights.
3. Some household security systems.
4. Perimeter fence for a pet.
5. Some people have problems with the transmitter picking up a signal from their skin. If you have problems try wearing the transmitter upside down. Normally the transmitter will be oriented so the Spirit Fitness logo is right side up.
6. The antenna that picks up your heart rate is very sensitive. If there is an outside noise source, turning the whole machine 90 degrees may de-tune the interference.
7. Another Individual wearing a transmitter within 3' of your machine's console.

If you continue to experience problems contact your dealer.

GENERAL MAINTENANCE

Wipe down all areas in the sweat path with a damp cloth after each workout.
If a squeak, thump, clicking or rough feeling develops the main cause is most likely one of two reasons:

I. The hardware was not sufficiently tightened during assembly. All bolts that were installed during assembly need to be tightened as much as possible. It may be necessary to use a larger wrench than the one provided if you cannot tighten the bolts sufficiently. I cannot stress this point enough; 90% of calls to the service department for noise issues can be traced to loose hardware.
II. The crank arm nut needs to be retightened
III. If squeaks or other noises persist, check that the unit is properly leveled. There are 2 leveling pads on the bottom of the rear stabilizer, use a 14mm wrench (or adjustable wrench) to adjust the levelers.

Engineering Mode Menu

The console has built in maintenance/diagnostic software. The software will allow you to change the console settings from English to Metric and turn off the beeping of the speaker when a key is pressed for example. To enter the Engineering Mode Menu, press and hold down the **Start**, **Stop** and **Enter** keys. Keep holding the keys down for about 5 seconds and the Message Center will display Engineering Mode Menu. Press the **Enter** key to access the menu below:

1. Key Test (Will allow you to test all the keys to make sure they are functioning)
2. LCD Test (Tests all the display functions)
3. Functions (Press **Enter** to access settings and **Up** arrow to scroll)
   I. Display Mode (Turn off to have the console power down automatically after 20 minutes of inactivity)
   II. Pause Mode (Turn on allow 5 minutes of pause, turn off to have the console pause indefinitely)
   III. ODO Reset (Resets the odometer)
   IV. Units (Sets the display to readout in English or Metric display measurements)
   V. Beep (Turns off the speaker so no beeping sound is heard)
   VI. Motor Test
   VII. Safety
4. Security (Allows the keypad to be locked to prevent unauthorized use)

Incline Calibration: If there is a problem with the incline, try running the calibration. Press the Start key, Level up key & Stop key at the same time. Hold them down for 5 seconds and the Incline calibration will star t and run automatically. If the problem persists, contact the service department.

Bluetooth mode Press the **ENTER** and the **DISPLAY** key at the same time. Hold them down for 5 seconds and the Message Window will display "BLUETOOTH". Press the **Level +/ -** keys to choose **ON/OFF.** When finish, press **STOP** or **ENTER** key to exit.

Incline Stepper Warranty - Effective February 19, 2021

Spirit Fitness, Inc. (Spirit Fitness) warrants all its Incline Stepper parts for a period of time listed below from the date of retail sale, as determined by sale receipt, or in the absence of a sales receipt eighteen (18) months from the original factory shipping date. Spirit Fitness' responsibilities include providing new or remanufactured parts, at Spirit Fitness' option, and technical support to our independent dealers and servicing organizations. In the absence of a dealer or service organization, these warranties will be administered by Spirit Fitness directly to a consumer. The warranty period applies to the following components:

Warranty	**Frame**	**Brake**	**Parts**	**Labor**
Light Commercial (5 Hours use or less in a non-dues paying facility)	Lifetime	5 Years	3 Years	1 Year
Residential	Lifetime	Lifetime	10 Years	1 Year

NORMAL RESPONSIBILITIES OF THE CONSUMER

This warranty applies only to products in ordinary household or Light Commercial use (see restrictions above), and the consumer/facility is responsible for the items listed below:

1. The warranty registration card must be completed and returned to the address listed on the card within 10 days of the original purchase to validate the manufacturer's limited warranty.
2. Proper use of the Incline Stepper in accordance with the instructions provided in this manual
3. Proper installation in accordance with instructions provided with the Incline Stepper and with all local electric codes.
4. Expenses for making the Incline Stepper accessible for servicing, including any item that was not part of the Incline Stepper at the time it was shipped from the factory.
5. Damages to the Incline Stepper finish during shipping, installation or following installation.
6. Routine maintenance of this unit as specified in this manual.

EXCLUSIONS

This warranty does not cover the following:

1. CONSEQUENTIAL, COLLATERAL, OR INCIDENTAL DAMAGES SUCH AS PROPERTY DAMAGE AND INCIDENTAL EXPENSES RESULTING FROM ANY BREACH OF THIS WRITTEN OR ANY IMPLIED WARRANTY.
   Note: Some states do not allow the exclusion or limitation of incidental or consequential damages, so this limitation or exclusion may not apply to you.
2. Service call reimbursement to the consumer. Service call reimbursement to the dealer that does not involve malfunction or defects in workmanship or material, for units that are beyond the warranty period, for units that are beyond the service call reimbursement period, for Incline Stepper not requiring component replacement, or Incline Stepper not in ordinary household or light commercial use.
3. Damages caused by services performed by persons other than authorized Spirit Fitness service companies; use of parts other than original Spirit Fitness parts; or external causes such as corrosion, discoloration of paint or plastic, alterations, modifications, abuse, misuse, accident, improper maintenance, inadequate power supply, or acts of God.
4. Products with original serial numbers that have been removed or altered.

5. Products that have been: sold, transferred, bartered, or given to a third party.
6. Products that do not have a warranty registration card on file at Spirit Fitness. Spirit Fitness reserves the right to request proof of purchase if no warranty record exists for the product.
7. THIS WARRANTY IS EXPRESSLY IN LIEU OF ALL OTHER WARRANTIES EXPRESSED OR IMPLIED, INCLUDING THE WARRANTIES OF MERCHANTABILITY AND/OR FITNESS FOR A PARTICULAR PURPOSE.
8. Product use in any environment other than a residential setting or non-dues paying facility with 5 hours use or less per day.
9. Warranties outside of the United States may vary. Please contact your local dealer for details.

SERVICE

Keep your bill of sale. Twelve (12) months from the date on the bill of sale or eighteen (18) months from the date of factory shipping as determined by the serial number establishes the labor warranty period should service be required. If service is performed, it is in your best interest to obtain and keep all receipts. This written warranty gives you specific legal rights. You may also have other rights that vary from state to state. Service under this warranty must be obtained by following these steps, in order:

1. Contact your selling authorized Spirit Fitness dealer. OR
2. Contact your local authorized Spirit Fitness service organization.
3. If there is a question as to where to obtain service, contact our service department at (870) 935-1107.
4. Spirit Fitness' obligation under this warranty is limited to repairing or replacing, at Spirit Fitness' option, the product through one of our authorized service centers. All repairs must be preauthorized by Spirit Fitness. If the product is shipped to a service center freight charges to and from the service center will be the customer's responsibility. For replacement parts shipped while the product is under warranty, the customer will be responsible for shipping and handling charges. For in-home service, the customer will be responsible for a trip charge. There will be an additional trip charge if the customer is located over 100 miles from the nearest service center.
5. The owner is responsible for adequate packaging upon return to Spirit Fitness. Spirit Fitness is not responsible for damages in shipping. Make all freight damage claims with the appropriate freight carrier. DO NOT SHIP ANY UNIT TO OUR FACTORY WITHOUT A RETURN AUTHORIZATION NUMBER. All units arriving without a return authorization number will be refused.
6. For any further information, or to contact our service department by mail, send your correspondence to:

Spirit Fitness, Inc.
P.O. Box 2037
Jonesboro, AR 72402-2037

Product features or specifications as described or illustrated are subject to change without notice. All warranties are made by Spirit Fitness, Inc. This warranty applies only in the 48 contiguous United States. NOTE: This does not apply to Alaska or Hawaii.

800.258.4555
spiritservice@spiritfitness.com
www.spiritfitness.com

Spirit Fitness
3000 Nestle Road
Jonesboro, AR 72401

SPIRIT

XS895 Owners Manual
© 2021 All Rights Reserved
Revision 6: 02.19.2021