Available At IRON COMPANY

SPIRIT COMMERCIAL

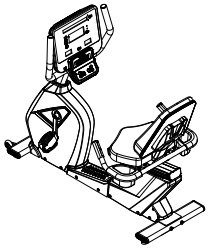

CR800 RECUMBENT BIKE

OWNER'S MANUAL

CR800_800140_OM_20230621

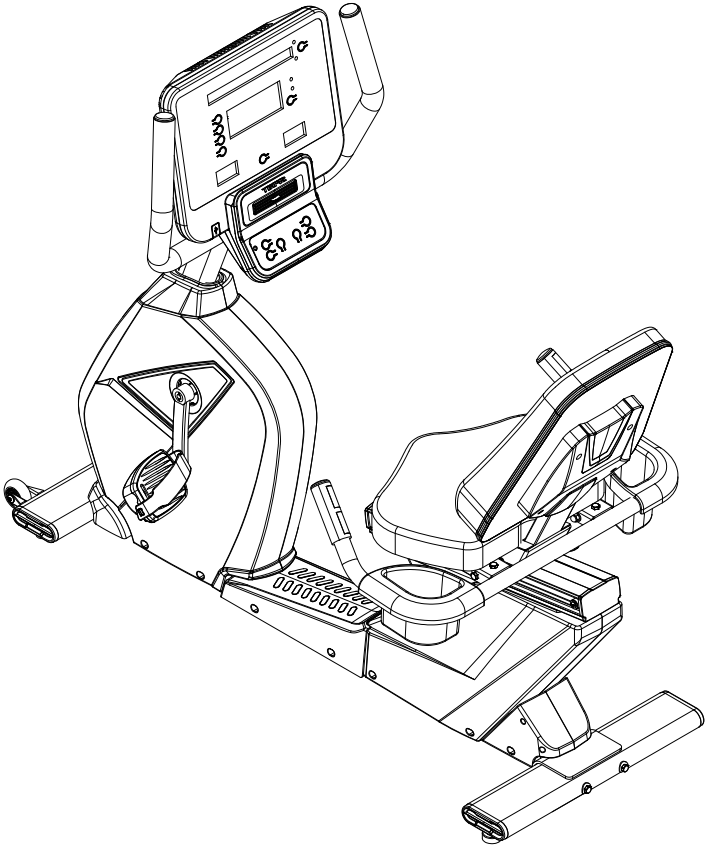

TABLE OF CONTENTS

3 PRODUCT REGISTRATION
4 IMPORTANT SAFETY INSTRUCTIONS
4 IMPORTANT ELECTRICAL INSTRUCTIONS
5 IMPORTANT OPERATION INSTRUCTIONS
7 CU800 ASSEMBLY INSTRUCTIONS
12 CONSOLE OPERATION
18 PROGRAMMABLE FEATURES
29 HEART RATE PROGRAMS
35 GENERAL MAINTENANCE
37 MANUFACTURER'S LIMITED WARRANTY
40 EXPLODED VIEW
41 PARTS LIST

Thank you for purchasing our product, please save these instructions. Please do not perform or attempt any customizing, adjustments, repair or maintenance that is not described in this manual.

SPIRIT COMMERCIAL

Congratulations on your new fitness bike and welcome to the Spirit Fitness family!

Thank you for your purchase of this quality fitness bike from Spirit Fitness. Your new fitness bike was manufactured by one of the leading fitness manufacturers in the world and is backed by one of the most comprehensive warranties available. Through your dealer, Spirit Fitness will do all we can to make your ownership experience as pleasant as possible for many years to come. If not purchased direct from Spirit Fitness, the local dealership where you purchased this fitness bike is your administrator for all Spirit Fitness warranty and service needs. Their responsibility is to provide you with the technical knowledge and service personnel to make your experience more informed and any difficulties easier to remedy.

Please take a moment at this time to record the name of the dealer, their telephone number, and the date of purchase below to make any future, needed contact easy. We appreciate your support and we will always remember that you are the reason that we are in business.

Yours in Health,
Spirit Fitness

NAME OF DEALER_____

DEALER PHONE #_____

PURCHASE DATE_____

RECORD YOUR SERIAL NUMBER

Please record the serial number of this fitness product in the space provided below.

Serial Number:

REGISTER YOUR PURCHASE

The self-addressed product registration card must be completed in full and returned to Spirit Fitness. You can also go to http://www.spiritfitness.com/warranty under the Support tab to register online.

IMPORTANT SAFETY INSTRUCTIONS

⚠WARNING

- Before beginning this or any exercise program, consult a physician. This is especially important for persons over the age of 35 or persons with pre-existing health conditions.
- Keep children away from the fitness bike. There are obvious pinch points and other caution areas that can cause harm.
- Keep hands away from all moving parts.
- Never drop or insert any object into any openings.
- Do not use outdoors.
- Do not attempt to use your fitness bike for any purpose other than for the purpose it is intended.
- The hand pulse sensors are not medical devices. Various factors, including the user's movement, may affect the accuracy of heart rate readings. The pulse sensors are intended only as exercise aids in determining heart rate trends in general.
- Wear proper shoes. High heels, dress shoes, sandals or bare feet are not suitable for use on your fitness bike. Quality athletic shoes are recommended to avoid leg fatigue.
- Maximum User Weight: 450 lbs
- This appliance is not intended for use by persons with reduced physical, sensory or mental capabilities, or lack of experience and knowledge, unless they have been given supervision or instruction concerning use of the appliance by a person responsible for their safety.
- Keep children under the age of 13 away from this machine.

SAVE THESE INSTRUCTIONS - THINK SAFETY!

IMPORTANT ELECTRICAL INSTRUCTIONS

⚠WARNING

Be aware that the generator is producing A.C. power while the fitness bike is being used. Do not service the fitness bike while the generator is spinning; serious electric shock could occur.

NEVER expose this fitness bike to rain or moisture. This product is NOT designed for use outdoors, near a pool or spa, or in any other high humidity environment. The operating temperature specification is 40 to 120 degrees Fahrenheit, and humidity is 95% non-condensing (no water drops forming on surfaces).

IMPORTANT OPERATION INSTRUCTIONS

- NEVER operate this fitness bike without reading and completely understanding the results of any operational change you request from the computer.
- Understand that changes in resistance do not occur immediately. Set your desired resistance level on the computer console and release the adjustment key. The computer will obey the command gradually.
- Use caution while participating in other activities while pedaling on your fitness bike; such as watching television, reading, etc. These distractions may cause you to lose balance which may result in serious injury.
- Do not use excessive pressure on console control keys. They are precision set to function properly with little finger pressure.

⚠ WARNING

This product can expose you to chemicals including Toluene and Acrylamide which are known to the State of California to cause Cancer and birth defects or other reproductive harm. For more information, go to www.P65Warnings.ca.gov

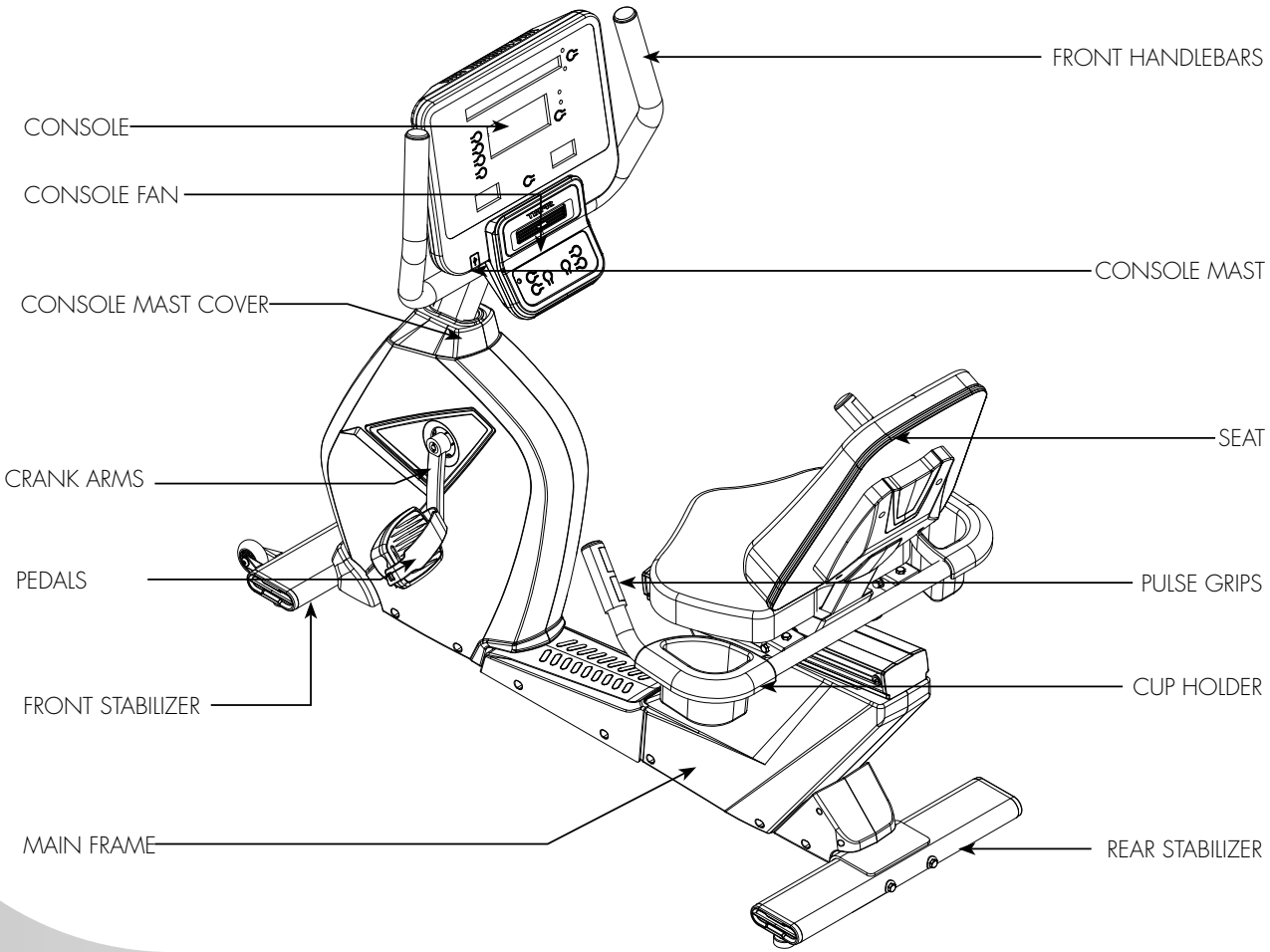
FRONT HANDLEBARS
CONSOLE
CONSOLE FAN
CONSOLE MAST
CONSOLE MAST COVER
SEAT
CRANK ARMS
PEDALS
PULSE GRIPS
CUP HOLDER
FRONT STABILIZER
MAIN FRAME
REAR STABILIZER

CR800 PRE-ASSEMBLY

UNPACKING

1. Cut the straps, then along the dotted line on the bottom of the box; lift the box over the unit and unpack.
2. Locate the hardware package. The hardware is separated into four steps. Remove the tools first. Remove the hardware for each step as needed to avoid confusion. The numbers in the instructions that are in parenthesis (#) are the item number from the assembly drawing for reference.

TOOLS INCLUDED:

- ❑ 14/15mm Wrench
- ❑ 12/14mm Wrench
- ❑ Phillips Screwdriver

PARTS INCLUDED:

- ❑ 1 Main Frame
- ❑ 1 Console Mast
- ❑ 1 Rear Stabilizer
- ❑ 1 Seat Back Frame
- ❑ 1 Front Handle Bar
- ❑ 1 Handle Bar
- ❑ 1 Seat Back Cover
- ❑ 1 Console Mast Cover
- ❑ 1 Front Stabilizer Cover
- ❑ 1 Rear Stabilizer Cover
- ❑ 1 Console
- ❑ 1 Seat Cushion
- ❑ 2 Cup Holders
- ❑ 2 Pedals
- ❑ 1 Hardware Kit

CR800 STEP ONE

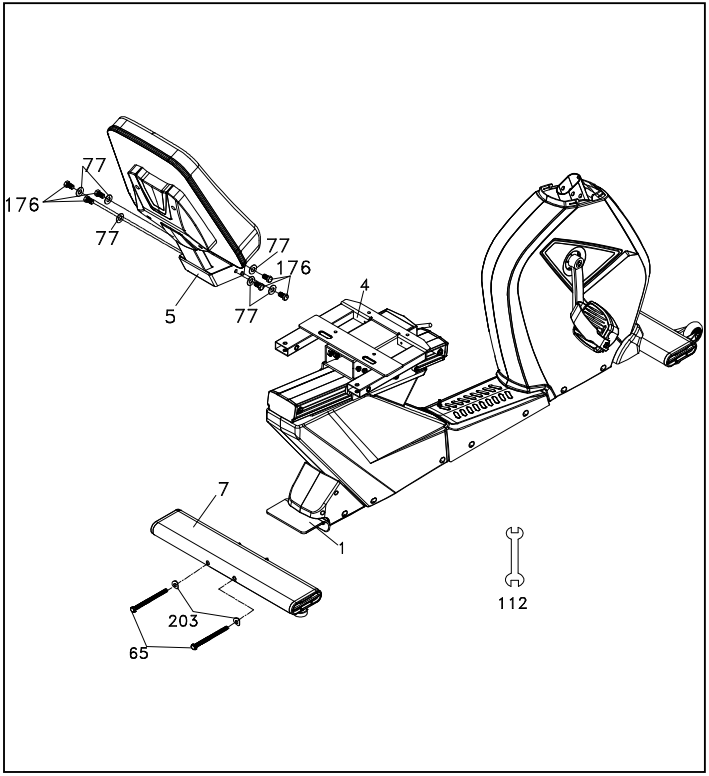

HARDWARE FOR STEP 1			
PART	TYPE	DESCRIPTION	QTY
65	HEX HEAD BOLT	3/8" x 135mm	2
77	FLAT WASHER	3/8" x 19 x 1.5T	6
176	HEX HEAD BOLT	3/8" x UNC16 x 3/4"	6
203	CURVED WASHER	3/8 X 23 X 2.0T	2

1. Install the **Rear Stabilizer (No.7)** onto the **Main Frame (No.1)** with 2 **Hex Head Bolts (No.65)** and 2 **Curved Washers (No.203)**.
2. Install the **Seat Back Bracket (No.5)** to the **Seat Carriage (No.4)** using 6 **Hex Head Bolts (No.176)** and 6 **Flat Washers (No.77)**.

CR800 STEP TWO

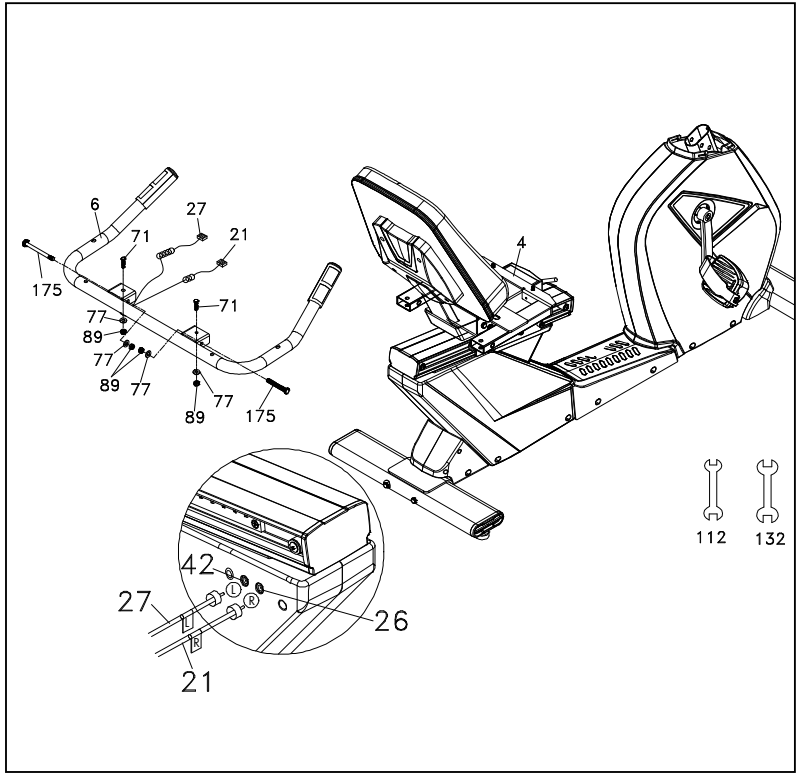

HARDWARE FOR STEP 2			
PART	TYPE	DESCRIPTION	QTY
71	HEX HEAD BOLT	3/8" x 1-3/4"	2
77	FLAT WASHER	ø3/8" x ø19 x 1.5T	4
89	NYLON NUT	3/8" x 7T	4
175	HEX HEAD BOLT	3/8X2-3/4"	2

1. Install the **Rear Handlebar (No.6)** onto the **Seat Carriage (No.4)** with 4 **Hex Head Bolts (No.71)** installed through the top holes and secured with 4 **Flat Washers (No.77)** and **Nylon Nuts (No.89)**. Install 2 **Hex Head Bolts (No.175)** through the side holes and secure with 2 **Flat Washers** (No.77) and **Nylon Nuts (No.89)**.
2. Plug the **Left Hand Pulse Wire** (No.27) into the corresponding **Left Socket** (No.42) located in the left plastic side case under the seat carriage, and the **Right Hand Pulse Wire** (No.21) into the **Right Socket** (No.26).

CR800 STEP THREE

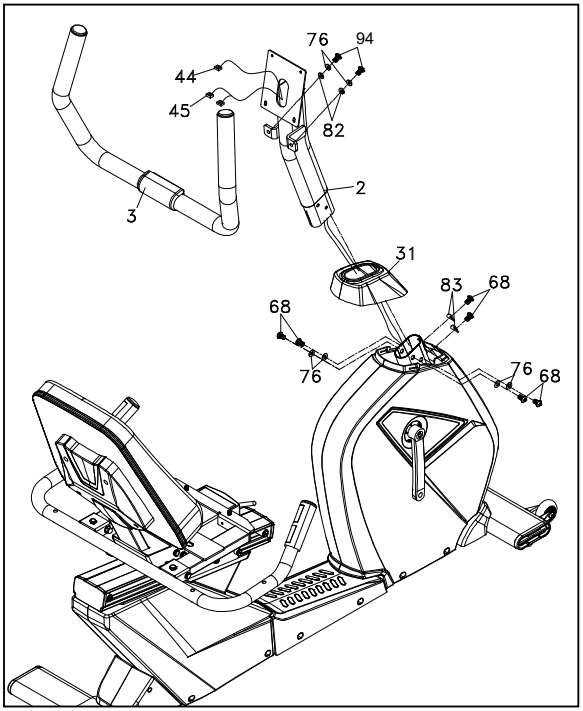

HARDWARE FOR STEP 3			
PART	TYPE	DESCRIPTION	QTY
68	HEX HEAD BOLT	5/16"X5/8"	6
76	FLAT WASHER	ø8 x ø19 x 1.5T	6
82	SPLIT WASHER	ø5/16" x 1.5T	2
83	CURVED WASHER	ø5/16" x 19 x 1.5T	2
94	HEX HEAD BOLT	5/16" X 3/4"	2

1. Install the **Console Mast Cover** (**No.31**) onto the **Console Mast** (**No.2**), making sure it is facing the correct direction as in the picture below. Run the two wire harnesses through the bottom of the console mast tube and out the top opening.
2. Pull the **Computer Cable (No.44)** and the **Handpulse Wire (No.45)** through **Console Mast (No.2)**
3. Slide the **Console Mast** into the **Main Frame (No.1)** being careful to not pinch the wires. Fasten the console mast with 6 **Hex Head Bolts** (**No.68**) and 4 **Flat Washers** (**No.76**) on the side bolts and 2 **Curved Washers** (**No.83**) on the front bolts. Snap the **Console Mast Cover (No.31)** in place.
4. Install the **Front Handlebars** (**No.3**) onto the **Console Mast (No.2)** with 2 **Hex Head Bolts** (**No.94**), **Split Washers** (**No.82**) and **Flat Washers** (**No.76**).

CR800 STEP FOUR

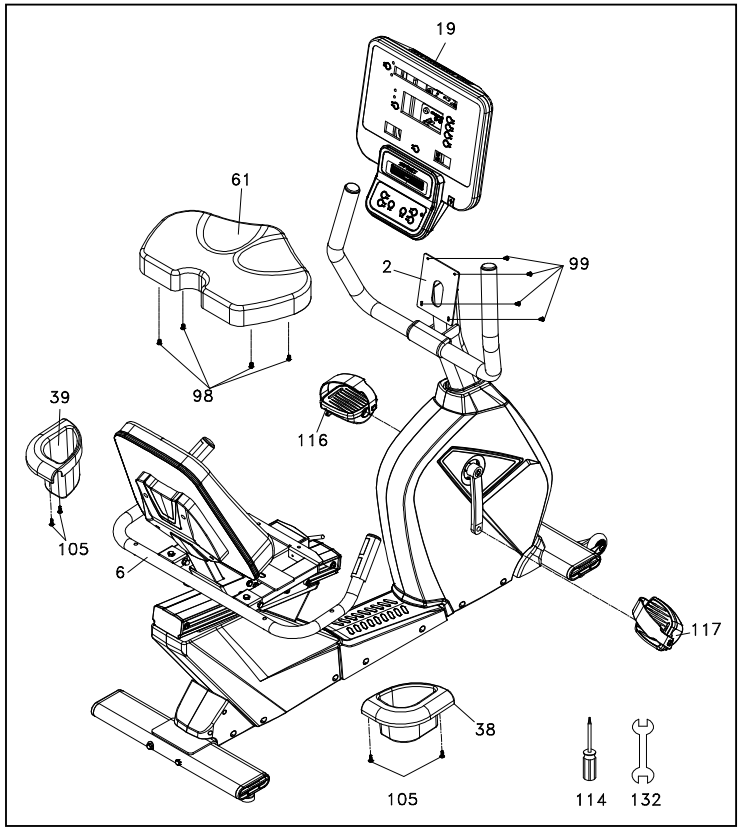

HARDWARE FOR STEP 4			
PART	TYPE	DESCRIPTION	QTY
98	HEX HEAD BOLT	M6 X 15MM	4
99	PHILIPS HEAD SCREW	M5X12MM	4
105	SHEET METAL SCREW	4MMX16MM	4

1. Install the left and right **Cup Holders** (**No.39 & 38**) to the rear handlebars with 4 **Sheet Metal Screws** (**No.105**).
2. Install the bottom **Seat Cushion** (**No.61**) to the **Seat Carriage** (**No.4**) with 4 **Hex Head Bolts** (**No.98**).
3. Install the **Pedals** (**No.116 L, 117 R**) into the **Crank Arms** (**No.51 L, 51 R**). Remember that the left pedal has a reverse thread and will be screwed in with the opposite rotation. Make sure to tighten the pedals as much as you possibly can.
4. Connect the 2 **Wire Harnesses** (**No.44 & 45**) to the corresponding connectors on the back of the console. Install the **Console (No.19)** onto the **Console Mast (No.2)** and secure with 4 **Philips Head Screws** (**99**) being careful to not pinch the wires.

SPIRIT COMMERCIAL

CR800 CONSOLE OPERATION

Scan Button for LED Windows
LED Data Display Windows
Scan Button for Dot Matrix
Fan
Dot Matrix Message Center
Up, Down, Program Controls
USB Charger
Start, Stop, Level Controls
DISTANCE
CALORIES
PULSE
TIME ELAPSED
SPEED
WATTS
METs
TIME REMAINING
TRACK
PROFILE
ENTER
PROGRAM
RPM
LEVEL
SPIRIT
START
STOP

POWER

The recumbent has a built-in generator for power and do not need to be plugged into an AC outlet. To power up the recumbent simply start to pedal, the console will turn on automatically.

When initially powered on, the console will perform an internal self-test. During this time the display may not light up for a few seconds. Continue pedaling and the display will light up. Once powered on, the **Dot Matrix Message Center** will be scrolling the start-up message. You may now begin your workout program.

CSAFE FEATURE

Your console is equipped with a CSAFE feature. The Power (POWER) port can be used for powering a remote controlled audio-visual system by connecting a cable from the remote to the Power port at the back of the console. The Communication port (COMM) can be used to interact with fitness software applications.

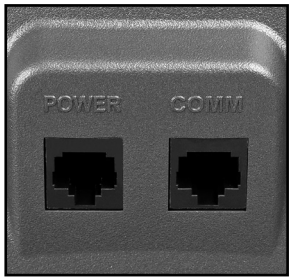

QUICK START

This is the quickest way to start a workout. After the console powers up you just press the **Start** key to begin. This will initiate the Quick Start mode. In Quick Start the Time will count up from zero, all workout data will start to accrue and the workload may be adjusted manually by pressing the **Level Up** and **Down** buttons. The **Dot Matrix Message Center** display will show just the bottom row lit. As you increase the workload more rows will light indicating a harder workout. The bike will get harder to pedal as the rows increase. The **Dot Matrix Message Center** has 24 columns of lights and each column represents 1 minute. At the end of the 24th column (or 24 minutes of work) the display will wrap around and start at the first column again.

There are 40 levels of resistance – displayed as 10 rows of lights – available for plenty of variety. The first 10 levels are very easy workloads, and the changes between levels are set to a good progression for de-conditioned users. Levels 10-20 are more challenging but the increases from one level to the next remain small. Levels 20-30 start getting tough as the levels jump more dramatically. Levels 30-40 are extremely hard and are good for short interval peaks and elite athletic training.

1/4 MILE TRACK

The 1/4-mile track (0.4 km) will be displayed around the dot matrix window. The flashing dot indicates your progress. In the center of the track there is a lap counter for reference.

HEART RATE WINDOW

The Pulse (Heart Rate) window will display your current heart rate in beats per minute during the workout. You must use both left and right stainless steel sensors to pick up your pulse. Pulse values are displayed

anytime the computer is receiving a Grip Pulse signal. You may use the Grip Pulse feature while in Heart Rate Control. The CR800 will also pick up wireless heart rate transmitters that are Polar compatible, including coded transmissions.

TO TURN BIKE OFF

The display will automatically turn off (go to sleep) after 30 minutes of inactivity. This function is called sleep mode. In sleep mode, the bike will power down most everything except for a minimum of circuitry for detecting button presses and the safety button so it will start up again if these are activated. There is only a tiny amount of current used in sleep mode (about the same as your TV when it is turned off) and it is perfectly fine to leave the main power switch on in sleep mode. Of course you may also remove the safety button or turn off the main power switch to power down the bike.

BASIC INFORMATION

The **Dot Matrix Message Center**, or **Profile Window**, will display the workout Profile. The **LED Data Display Window** displays pertinent exercise data. There is a RPM window for pedal speed and a Level window indicating machine resistance.

The **LED Data Display Windows** will initially be displaying **Distance**, **Calories**, **Pulse** and **Time Elapsed** information. When the **Up/Down Scan** key is pressed the next set of information will appear: **Speed**, **Watts**, **METs**, **Time Remaining**. Pressing the **Up/Down Scan** button, the Scan mode is activated and the **LED Data Display Window** will show each set of data for four seconds then switch to the next set of data in a continuous loop. Pressing the **Up/Down Scan** button again will bring you back to the beginning.

The **Stop** key button actually has several functions. Pressing the **Stop** key once during a program will pause the program for 5 minutes. If you need to get a drink, answer the phone, or any of the many things that could interrupt your workout, this is a great feature. To resume your workout during Pause just press the **Start** key. If the **Stop** key is pressed twice during a workout, the program will end and the console will return to the start-up screen. If the **Stop** key button is held down for 3 seconds, the console will perform a complete Reset. During data entry for a program the **Stop** key performs a Previous Screen function. This allows you to go back one step in the programming each time you press the **Stop** key button.
The **Program** Key is used to preview each program. When you first turn the console on, you may press **Program** key to preview what the program profile looks like. If you decide that you want to try a program, press the **Enter** key to select the program and enter into the data set-up mode.

PROGRAMMING THE CONSOLE

Each of the programs can be customized with your personal information and changed to suit your needs. Some of the information asked for is necessary to ensure the readouts are correct. You will be asked for your **Age** and Weight. Your **Age** is also necessary during the Heart Rate control program to ensure the correct settings are in the program for your **Age**. Otherwise the work settings could be too high or low for you; entering your **Weight** aides in calculating a more correct calorie reading. Although we cannot provide an exact calorie count we do want to be as close as possible.

CALORIE NOTE: Calorie readings on every piece of exercise equipment, whether it is in a gym or at home, are not accurate and tend to vary widely. They are meant only as a guide to monitor your progress from workout to workout. The only way to measure your calorie burn accurately is in a clinical setting connected to a host of machines. This is because every person is different and burns calories at a different rate.

ENTERING & CHANGING SETTINGS

When you enter a program, you have the option of entering your own personal settings. If you want to work out without entering new settings, then just press the **Start** key. This will bypass the programming of data and take you directly to the start of your workout. If you want to change the personal settings, then just follow the instructions in the **Dot Matrix Message Center**. If you start a program without changing the settings, the default, or pre-saved settings will be used.

MANUAL

The Manual program works as the name implies, manually. This means that you control the workload yourself and not the computer. To start the Manual program follow the instructions below.

1. Using the **Program** button choose the **Manual** program then press the **Enter** button.
2. The **Dot Matrix Message Center** will ask you to enter your **Age**. You may enter your **Age**, using the **Up** and **Down** buttons, then press the **Enter** button to accept the new number and proceed onto the next screen.
3. You are now asked to enter your **Weight**. You may adjust the **Weight** number using the **Up** and **Down** buttons, then press enter to continue.
4. The next setting is **Time**. You may adjust the **Time** and press **Enter** to continue.
5. Now you are finished editing the settings and can begin your workout by pressing the **Start** button. You can alsogo back and modify your settings by pressing the **Enter** button.
   NOTE: At any time during the editing of data you can press the **Stop** button to go back one level, or screen.
6. The program automatically starts you at level one. This is the easiest level and it is a good idea to stay at level one for a while to warm up. If you want to increase the work load at any time press the **Level Up** button; the **Level Down** button will decrease the workload.
7. When the program ends you may press **Start** to begin the same program again or **Stop** to exit the program.

PRESET PROGRAMS

The fitness bike has five different programs that have been designed for a variety of workouts. These five programs have factory preset work level profiles for achieving different goals.

HILL

This program follows a triangle or pyramid type of gradual progression from approximately 10% of maximum effort (the level that you chose before starting this program) up to a maximum effort which lasts for 10% of the total workout time, then a gradual regression of resistance back to approximately 10% of maximum effort.

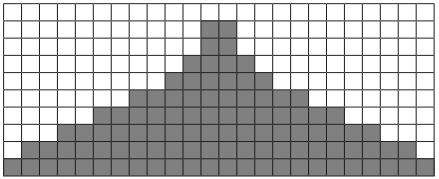

FAT BURN

This program follows a quick progression up to the maximum resistance level (default or user input level) that is sustained for 2/3 of the workout. This program will challenge your ability to sustain your energy output for an extended period of time.

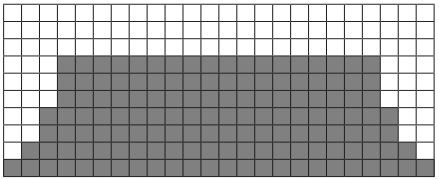

CARDIO

This program presents a quick progression up to near maximum resistance level (default or user input level). It has slight fluctuations up and down to allow your heart rate to elevate, and then recover repeatedly, before beginning a quick cool down. This will build up your heart muscle and increase blood flow and lung capacity.

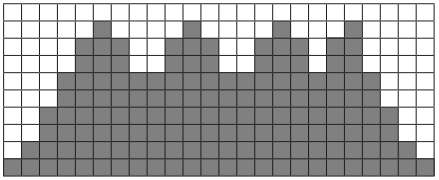

INTERVAL

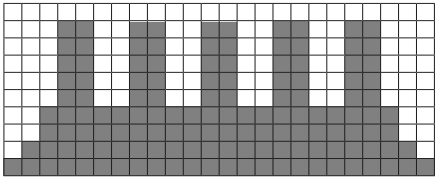

This program takes you through high levels of intensity followed by recovery periods of low intensity. This program utilizes and develops your "Fast Twitch" muscle fibers which are used when performing tasks that are intense and short in duration. These deplete your oxygen level and spike your heart rate, followed by periods of recovery and heart rate drop to replenish oxygen. Your cardiovascular system gets programmed to use oxygen more efficiently.

PROGRAMMING PRESET PROGRAMS

1. Using the **Program** button select your desired program then press the **Enter** button.
1. The **Dot Matrix Message Center** will ask you to enter your **Age**. You may adjust the age setting, using the **Up** and **Down** keys, then press the **Enter** key to accept the new number and proceed on to the next screen.
2. You are now asked to enter your **Weight**. You may adjust the weight number using the **Up** and **Down** keys, then press **Enter** to continue.
3. Next is **Time**. You may adjust the **Time** and press **Enter** to continue.
4. Now you are asked to adjust the **Max Level**. This is the peak exertion level you will experience during the program (at the top of the hill). Adjust the level and then press **Enter**.
5. Now you are finished editing the settings and can begin your workout by pressing the **Start** key. You can also go back and modify your settings by pressing the **Stop** key to go back one level, or screen.
6. If you want to increase or decrease the workload at any time during the program press the **Level Up** or **Down** key. This will change the workload settings of the entire profile, although the profile picture on the screen will not change. The reason for this is so that you can see the entire profile at all times. If the profile picture is changed it will look distorted and not a true representation of the actual profile. When you make a change to the workload, the **Dot Matrix Message Center** will show both the current column and program maximum levels of work.
7. During the program you will be able to scroll through the data in the **LED Data Display Window** by pressing the **Up/Down Scan** key next to the **LED Data Display Windows**.

8. When the program ends the **Dot Matrix Message Center** and **LED Data Display Windows** will show a summary of your workout. The summary will be displayed for a short time then the console will return to the start-up display.

HIIT PROGRAM

The HIIT, or High Intensity Interval Training, program takes advantage of the latest trend in fitness. During the program you will perform short bursts of high intensity sprinting followed by short rest periods. HIIT is a fully customizable interval training program. You can enter the number of intervals, time of each interval Sprint and Rest periods and the work intensity of the levels.

1. Using the **Program** button choose the **HIIT** program then press **Enter**. The **Dot Matrix Message Center** will ask you to enter your **Age**. You may enter your **Age**, using the **Up** and **Down** keys, then press the **Enter** key to accept the new number and proceed on to the next screen.
2. You are now asked to enter your **Weight**. You may adjust the Weight number using the **Up** and **Down** keys then press **Enter** to continue.
3. Next you are asked for the number of intervals you want to do. The default is 10 and the range available is 3 to 15. One interval equals 1 Sprint and 1 Rest segment.
4. Now you are asked to adjust the Sprint Level. This is the resistance level you will experience during the Sprint segments of the program. Adjust the level and then press **Enter**.
5. Now you are asked to adjust the Rest Level. This is the resistance level you will experience during the Rest segments of the program. Adjust the level and then press **Enter**.
6. Next is entering the Interval time. The **Dot Matrix Message Center** shows: Sprint Time:30 and Rest Time:30. The Sprint time will be blinking. You may use the **Up/Down** keys to adjust the Sprint time from 20 to 60 seconds then press **Enter**. The time for the Rest period will blink and you can adjust the time using the up and down keys and press **Enter**.

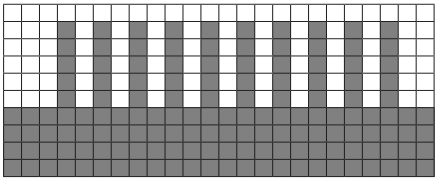

CONSTANT POWER PROGRAM

A Watts program is a controllable constant power whose Level adjusts when the speed is changed. To start the Constant Power program follow the instructions below.

1. Using the **Program** button choose the **Constant Power** program, then press the **Enter** button.
2. The **Dot Matrix Message Center** will ask you to enter your Age. Input your Age, using the **Up/Down** buttons, then press the **Enter** button to accept the new age and proceed on to the next screen.
3. You are now asked to enter your **Weight**. Adjust Weight using the **Up/Down** buttons then press **Enter** to continue.
4. Next is **Time.** Adjust the Time, then press **Enter** to continue.
5. Now you are asked to adjust the Target Watt Level. This is the constant power you will experience during the program. Adjust using the **Up/Down** buttons, then press **Enter**.
6. Now you are finished editing the settings and can begin your workout by pressing the **Start** button. You can also go back and modify your settings by pressing the **Enter** button. *NOTE: At any time during the editing of data, you can press the* **Stop** *button to go back one level, or screen.*
7. If you want to increase or decrease the workload at any time during the program, press the **Up/Down** button. This will allow you to change your target Watt level at any time during the program.
8. During the Constant Power program you will be able to scroll through the data in the **LED Data Display Window** by pressing the adjacent **Up/Down Scan** buttons.
9. When the program ends, you may press **Start** to begin the same program again or **Stop** to exit the program.

FIT TEST PROGRAM

The VO2 program is based on the YMCA protocol and is a sub-maximal test that uses pre-determined, fixed work levels that are based on your heart rate readings as the test progresses. The test will take anywhere between 6 to 15 minutes to complete, depending on your level of fitness. The test ends when your heart rate reaches 85% of maximum at any time during the test or your heart rate is between 110 bpm and 85% at the end of two consecutive stages. At the end of the test a VO2max score will be given. VO2max stands for Volume of Oxygen uptake which is a measurement of how much oxygen you need to perform a known amount of work. The YMCA protocol uses two to four, 3 minute stages of continuous exercise (see charts below). You will be asked to choose either, "Male" or "Female" at the beginning of the test. This choice determines which test parameters will be used during the test as shown in the charts below. If you are a de-conditioned male, you may want to choose the option for "Female" to assist in the correct calculations. Similarly, if you are a very conditioned female, you may want to choose the option for "Male."

WORKLOAD CHART FOR MALE OR VERY FIT FEMALE:

1st Stage				300 kgm/min					
HR		**< 90**			**90 - 105**			**> 105**	
2nd Stage		900 kgm/min			750 kgm/min			600 kgm/min	
HR	**HR <120**	**HR 120-135**	**HR >135**	**HR <120**	**HR 120-135**	**HR >135**	**HR <120**	**HR 120-135**	**HR >135**
3rd stage	1350 kgm/min	1200 kgm/min	1050 kgm/min	1200 kgm/min	1050 kgm/min	900 kgm/min	1050 kgm/min	900 kgm/min	750 kgm/min

WORKLOAD CHART FOR FEMALE OR DE-CONDITIONED MALE

1st Stage			150 kgm/min	
Heart Rate	**HR<80**	**HR: 80-90**	**HR: 90-100**	**HR>100**
2nd Stage	750 kgm/min	600 kgm/min	450 kgm/min	300 kgm/min
3rd Stage	900 kgm/min	750 kgm/min	600 kgm/min	450 kgm/min
4th Stage	1050 kgm/min	900 kgm/min	700 kgm/min	600 kgm/min

FITNESS TEST PROGRAMMING

1. Using the **Program** button choose the **Fitness Test** program and press **Enter**.
2. The **Dot Matrix Message Center** will display **Gender**. Use the **Up** and **Down** arrows if you need to change, then press **Enter**. The choice of gender determines which workload chart will be used for the test.
3. The **Dot Matrix Message Center** will ask you to enter your **Age**. You may adjust the age setting, using the **Up** and **Down** buttons then press the **Enter** button to accept the new number and proceed on to the next screen.
4. You are now asked to enter your **Weight**. You may adjust the weight number using the **Up** and **Down** buttons then press **Enter** to continue.
5. Now press **Start** to begin the test.

Before The Test:

- Make sure you are in good health; check with your physician before beginning a new exercise routine, especially if you are over the age of 35 or persons with pre-existing health conditions.
- Make sure you have warmed up and stretched before taking the test.
- Do not take in caffeine before the test.
- Hold the hand grips gently, do not tense up.

During The Test:

- The console must be receiving a steady heart rate for the test to begin. You may use the hand pulse sensors or wear a heart rate chest strap transmitter.
- You must maintain a steady 50 RPM pedal speed. If your pedal speed drops below 48 RPM or goes above 52 RPM the console will emit a steady beeping sound until you are within this range.
- You may scroll through the various data readings in the **LED Data Display Windows** by pressing the **Up/Down Scan** button next to the **LED Data Display Windows**.
- The **LED Data Display Window** will always display your pedal speed on the right side to help you maintain 50RPM.
- The data shown during the test is:
  a. Work in KGM is actually an abbreviated form of kg-m/min. which is a work measurement of kilogram-force meter/minute
  b. Work in Watts (1 watt is equal to 6.11829727787 kg-m/min.)
  c. HR is your actual heart rate; TGT is the target heart rate to reach to end the test.
  d. Time is the total elapsed time of the test.

After The Test:

- Cool down for about one to three minutes.
- Take note of your score because the console will automatically return to the start-up mode after a few minutes.

What Your Score Means:

VO2MAX CHART FOR MALES AND VERY FIT FEMALES

	18-25 years old	26-35 years old	36-45 years old	46-55 years old	56-65 years old	65+ years old
excellent	>60	>56	>51	>45	>41	>37
good	52-60	49-56	43-51	39-45	36-41	33-37
above average	47-51	43-48	39-42	35-38	32-35	29-32
average	42-46	40-42	35-38	32-35	30-31	26-28
below average	37-41	35-39	31-34	29-31	26-29	22-25
poor	30-36	30-34	26-30	25-28	22-25	20-21
very poor	<30	<30	<26	<25	<22	<20

VO2MAX CHART FOR FEMALES AND DE-CONDITIONED MALES

	18-25 years old	26-35 years old	36-45 years old	46-55 years old	56-65 years old	65+ years old
excellent	56	52	45	40	37	32
good	47-56	45-52	38-45	34-40	32-37	28-32
above average	42-46	39-44	34-37	31-33	28-31	25-27
average	38-41	35-38	31-33	28-30	25-27	22-24
below average	33-37	31-34	27-30	25-27	22-24	19-22
poor	28-32	26-30	22-26	20-24	18-21	17-18
very poor	<28	<26	<22	<20	<18	<17

CUSTOM PROGRAM

You can build your own custom program by following the instructions below.

1. Using the **Program** button, select **Custom** and then then press the **Enter** button to begin programming
2. Enter your name in the **Dot Matrix Message Center**, the letter "A" will be blinking. Use the **Up/Down** buttons to select the appropriate first letter of your name (pressing the **Up** button will switch to the letter "B"; pressing the **Down** button will switch to letter "Z"). Press **Enter** when the desired letter is displayed. Repeat this process until all of the characters of your name have been programmed (maximum 7 characters). When finished press **Stop**.
3. If there is a program already stored in **Custom**, you will have an option to run the program as it is or delete the program and build a new one. The **Dot Matrix Message Center** will ask: **Run Program**? Use the **Up/Down** arrows to select "Yes" or "No". If you select No, you will then be asked if you want to delete the currently saved program. It is necessary to delete the current program if you want to build a new one.
4. The **Dot Matrix Message Center** will ask you to enter your **Age**. You may enter your age, using the **Up/Down** buttons, then press the **Enter** button to accept the new value and proceed on to the next screen.
5. You are now asked to enter your **Weight**. You may adjust the weight value using the **Up/Down** buttons, then press **Enter** to continue.
6. Next is **Time**. You may adjust the time and press **Enter** to continue.
7. Now you are asked to adjust the **Max Resistance Level** of the program, press **Enter** when resistance has been selected.
8. Now the first column will be blinking and you are asked to adjust the resistance level for the first segment (SEGMENT > 1) of the workout by using the **Up** button. When you finish adjusting the first segment, or if you don't want to change, then press **Enter** to continue to the next segment.
9. The next segment will show the same workload resistance level as the previously adjusted segment. Repeat the same process as the last segment then press **Enter**. Continue this process until all twenty-four segments have been set.
10. After saving the program the **Dot Matrix Message Center** says "**New Program Saved**" then will give you the option to start or modify the program. Pressing **Stop** will exit to the start up screen.

HEART RATE PROGRAMS

The old motto, "no pain, no gain", is a myth that has been overpowered by the benefits of exercising comfortably. A great deal of this success has been promoted by the use of heart rate monitors. With the proper use of a heart rate monitor, many people find that their usual choice of exercise intensity was either too high or too low and exercise is much more enjoyable by maintaining their heart rate in the desired benefit range.

To determine the benefit range in which you wish to train, you must first determine your Maximum Heart Rate. This can be accomplished by using the following formula: 220 minus your age. This will give you the Maximum Heart Rate (MHR)for someone of your age. To determine the effective heart rate range for specific goals you simply calculate a percentage of your MHR. Your Heart rate training zone is 50% to 90% of your maximum heart rate. 60% of your MHR is the recommended for burning fat while 85% is recommended for strengthening the cardio vascular system. This 60% to 85% is the zone to stay in for maximum benefit.

For someone who is 40 years old their
target heart rate zone is calculated:
220 – 40 = 180 (maximum heart rate)
180 x .6 = 108 beats per minute (60% of maximum)
180 X .85 = 153 beats per minute (85% of maximum)
So for a 40 year old the training zone would
be 108 to 153 beats per minute.

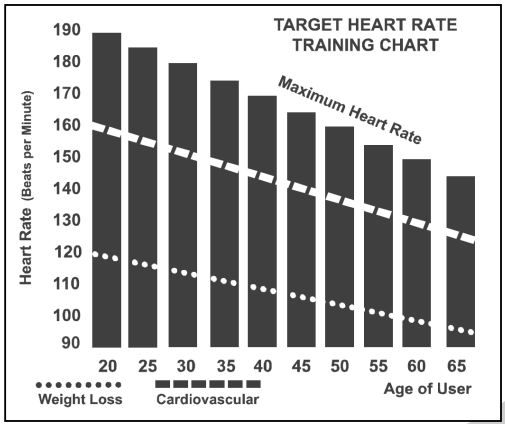

If you enter your age during programming the console will perform this calculation automatically. Entering your age is used for the Heart Rate programs. After calculating your MHR you can decide upon which goal you would like to pursue.

The two most popular reasons for, or goals, of exercise are cardiovascular fitness (training for the heart and lungs) and weight control. The black columns on the chart represent the MHR for a person whose age is listed at the bottom of each column. The training heart rate, for either cardiovascular fitness or weight loss, is represented by two different lines that cut diagonally through the chart. A definition of the lines' goal is in the bottom left-hand corner of the chart. If your goal is cardiovascular fitness or if it is weight loss, it can be achieved by training at 85% or 60%, respectively, of your MHR on a schedule approved by your physician. Consult your physician before participating in any exercise program.

With all Spirit Fitness machines you may use the heart rate monitor feature without using the Heart Rate program. However, when using the heart rate monitor feature in conjunction with the Heart Rate programs, the machine will automatically adjust speed or incline to maintain the desired heart rate.

HEART RATE PROGRAM OPERATION

Heart rate information is read wireless chest strap. To start the HR program, follow the directions in the **Dot Matrix Message Center**.

1. Using the **Program** button choose the **HR** program (65% or 80%)then press the **Enter** key.
2. The **Dot Matrix Message Center** will ask you to enter your **Age**. You may enter your Age, using the **Up/Down** keys, then press the **Enter** key to accept the new number and proceed on to the next screen.
3. You are now asked to enter your **Weight**. You may adjust the **Weight** number using the **Up/Down** keys, then press **Enter** to continue.
4. Next is **Time**. You may adjust the **Time** and press **Enter** to continue.
5. Now you are asked to adjust your target Heart Rate. This is the heart rate level you will try to maintain during the program. Adjust the value and then press **Enter**.
6. Now you are finished editing the settings and can begin your workout by pressing the **Start** key. You can also go back and modify your settings by pressing the **Enter** key. Note: At any time during the editing of data you can press the **Stop** key to go back one level, or screen.
7. If you want to increase or decrease the resistance at any time during the program, press the **Level Up/Down** key. This will allow you to change your target heart rate at any time during the program.
8. The program will automatically increase or decrease the amount of resistance, depending on whether your heart rate is above or below your target.

RATE OF PERCEIVED EXERTION

There are more variables involved in how hard you should workout than just heart rate. Your stress level, physical health, emotional health, temperature, humidity, the time of day, the last time you ate and what you ate, all contribute to the intensity at which you should workout.

The rate of perceived exertion (RPE), also know as the Borg scale, was developed by Swedish physiologist G.A.V. Borg. The scale helps users determine an approximate heart rate level when a heart rate monitor was not in use. Using the scale below, rate the level of intensity of your workout, or the perception of your effort during your workout. Once the rating has been determined, simply add a "0" to the rating to get your approximate heart rate. For example, if your workout felt comfortable, you would rate it a "12". Then add a "0" to get an approximate heart rate during your workout of 120 beats per minute. The scale is as follows:

Rating Perception of Effort

6 Minimal	10 Very light +	14 Somewhat hard +	18 Very hard +
7 Very,very light	11 Fairly light	15 Hard	19 Very,very hard
8 Very,very light +	12 Comfortable	16 Hard +	20 Maximal
9 Very light	13 Somewhat hard	17 Very hard	

WEARING THE CHEST STRAP (NOT INCLUDED)

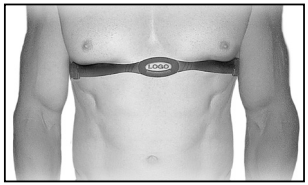

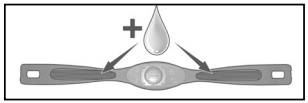

1. Attach the transmitter to the elastic strap using the interlocking button.
2. Adjust the strap as tightly as possible while ensuring it is still comfortable.
3. Position the transmitter with the logo centered in the middle of your torso facing away from your chest (some people must position the transmitter slightly left of center). Attach the final end of the elastic strap by inserting the round end and, using the locking parts, secure the transmitter and strap around your chest.
4. Position the transmitter directly below the pectoral muscles.
5. Sweat is the best conductor to measure very minute heart beat electrical signals. However, plain water can also be used to pre-wet the electrodes (2 ribbed oval areas on the reverse side of the belt and both sides of the transmitter). It's also recommended that you wear the transmitter strap a few minutes before your work out. Some users, because of body chemistry, have a more difficult time in achieving a strong, steady signal at the beginning. After "warming up", this problem lessens.
6. Your workout must be within range - distance between transmitter/receiver – to achieve a strong steady signal. The length of range may vary somewhat but generally stay close enough to the console to maintain good, strong, reliable readings. Wearing the transmitter directly on bare skin assures you of proper operation. If you wish, you may wear the transmitter over a shirt. To do so, wet the areas of the shirt that the electrodes will rest upon.

Note: The transmitter is automatically activated when it detects activity from the user's heart. Additionally, it automatically deactivates when it does not receive any activity. Although the transmitter is water resistant, moisture can have the effect of creating false signals, so you should take precautions to completely dry the transmitter after use to prolong battery life (estimated transmitter battery life is 2500 hours). The replacement battery is CR2032. The chest strap is sold separately. Chest straps that operate using Bluetooth or ANT+ should also work with this machine.

ERRATIC OPERATION

Caution! Do not use this fitness bike for Heart Rate programs unless a steady, solid Actual Heart Rate value is being displayed. High, wild, random numbers being displayed indicate a problem.

Areas to look for interference which may cause erratic heart rate:

1. Microwave ovens, TV's, small appliances, etc.
2. Fluorescent lights.
3. Some household security systems.
4. Electric fence for a pet.
5. Some people have problems with the transmitter picking up a signal from their skin. If you have problems try wearing the transmitter upside down. Normally the transmitter will be oriented so the Spirit Fitness logo is right side up.
6. The antenna that picks up your heart rate is very sensitive. If there is an outside noise source, turning the whole machine 90 degrees may de-tune the interference.
7. Another Individual wearing a transmitter within 3' of your machine's console.

If you continue to experience problems contact your dealer.

GENERAL MAINTENANCE

1. Wipe down all areas in the sweat path with a damp cloth after each workout.
2. If a squeak, thump, clicking or rough feeling develops the main cause is most likely one of two reasons:
   a. The hardware was not sufficiently tightened during assembly. All bolts that were installed during assembly need to be tightened as much as possible. It may be necessary to use a larger wrench than the one provided if you cannot tighten the bolts sufficiently. I cannot stress this point enough; 90% of calls to the service department for noise issues can be traced to loose hardware.
   b. The crank arm nut needs to be retightened
   c. If squeaks or other noises persist, check that the unit is properly leveled. There are 2 leveling pads on the bottom of the rear stabilizer, use a 14mm wrench (or adjustable wrench) to adjust the levelers.

SANITIZING YOUR SPIRIT FITNESS EQUIPMENT

- Unupholstered high-contact surfaces (hard plastics) can be sanitized using a 75% isopropyl alcohol solution and a clean, dry cloth. Spray surfaces to be sanitized, and use the dry cloth to wipe clean. Allow surfaces to dry before using.
- For upholstered or soft-plastic surfaces, use a conditioner after sanitizing. Be sure to follow the instructions provided by the conditioner manufacturer to ensure proper use of the conditioner.
- Alternatively, you can make your own spray by mixing the proper ratio of isopropyl alcohol and distilled water to reach a 75% solution.
- For more details on sanitization, or to learn how to make your own spray solution, please visit https://support.spiritfitness.com/hc/en-us/articles/4406787148564 .

ENGINEERING MODE MENU

The console has built in maintenance/diagnostic software. The software will allow you to change the console settings from English to Metric and turn off the beeping of the speaker when a button is pressed for example. To enter the Engineering Mode Menu, press and hold down the **Start**, **Stop** and **Enter** buttons. Keep holding the buttons down for about 5 seconds and the Message Center will display Engineering Mode Menu. Press the **Enter** button to access the menu below:

1. Key Test (Will allow you to test all the keys to make sure they are functioning)
2. Display Test (Tests all the display functions)
3. Function
   - Units - Sets the display to read out in Imperial (miles, pounds, feet, etc.) or Metric (kilometers, kilograms, meters, etc.) display measurements
   - Pause mode (have five minutes)
   - Odometer Reset (Resets the odometer)
   - Beep sound (Control Beep)
4. Service
   - PWM test (Test the Brake resistance)
   - Csafe test
   - Sensor test (Test the speed sensor function)
5. Exit

FITNESS BIKE WARRANTY – EFFECTIVE JUNE 21, 2023

Spirit Fitness warrants all its fitness bike parts for a period of time listed below from the date of retail sale, as determined by sale receipt, or in the absence of a sales receipt eighteen (18) months from the original factory shipping date. Spirit Fitness' responsibilities include providing new or remanufactured parts, at Spirit Fitness' option, and technical support to our independent dealers and servicing organizations. In the absence of a dealer or service organization, these warranties will be administered by Spirit Fitness directly to a consumer. The warranty period applies to the following components:

Warranty	Frame	Electronics	Parts	Labor
Commercial (Non-Dues Paying Facilities)	Lifetime	5 Years	5 Years	2 Year
Residential	Lifetime	10Years	10 Years	2 Year

*Prisons and correctional facilities are excluded from warranty coverage.

NORMAL RESPONSIBILITIES OF THE CONSUMER

The consumer or non-dues paying facility is responsible for the items listed below:

1. The warranty registration card must be completed and returned to the address listed on the card within 10 days of the original purchase, or completed online to validate the manufacturer's limited warranty.
2. Proper use of the fitness equipment in accordance with the instructions provided in this manual
3. Proper installation in accordance with instructions provided with the fitness equipment and with all local electric codes.
4. Proper connection to a grounded power supply of sufficient voltage, replacement of blown fuses, repair of loose connections or defects in house or facility wiring.
5. Expenses for making the fitness equipment accessible for servicing, including any item that was not part of the fitness equipment at the time it was shipped from the factory.
6. Damages to the fitness equipment finish during shipping, installation or following installation.
7. Routine maintenance of this unit as specified in this manual.

EXCLUSIONS

This warranty does not cover the following:

1. CONSEQUENTIAL, COLLATERAL, OR INCIDENTAL DAMAGES SUCH AS PROPERTY DAMAGE AND INCIDENTAL EXPENSES
   RESULTING FROM ANY BREACH OF THIS WRITTEN OR ANY IMPLIED WARRANTY.
   Note: Some states do not allow the exclusion or limitation of incidental or consequential damages, so this limitation or exclusion may not apply to you.
2. Service call reimbursement to the consumer. Service call reimbursement to the dealer that does not involve malfunction or defects in workmanship or material, for units that are beyond the warranty period, for units that are beyond the service call reimbursement period, for fitness equipment not requiring component replacement, or fitness equipment not in non-dues paying facility or household use.
3. Damages caused by services performed by persons other than authorized Spirit Fitness service companies; use of parts other than original Spirit Fitness parts; or external causes such as corrosion, discoloration of paint or plastic, alterations, modifications, abuse, misuse, accident, improper maintenance, inadequate power supply, or acts of God.
4. Products with original serial numbers that have been removed or altered.
5. Products that have been: sold, transferred, bartered, or given to a third party.
6. Products that do not have a warranty registration card on file at Spirit Fitness. Spirit Fitness reserves the right to request proof of purchase if no warranty record exists for the product.
7. THIS WARRANTY IS EXPRESSLY IN LIEU OF ALL OTHER WARRANTIES EXPRESSED OR IMPLIED, INCLUDING THE WARRANTIES OF MERCHANTABILITY AND/OR FITNESS FOR A PARTICULAR PURPOSE.
8. Product used in a dues paying facility (YMCA, Health Club, Etc.)
9. Product used in prisons and correctional facilities
10. Warranties outside of the United States may vary. Please contact your local dealer for details.

SERVICE

Keep your bill of sale. Twelve (12) months from the date on the bill of sale or eighteen (18) months from the date of factory shipping as determined by the serial number establishes the labor warranty period should service be required. If service is performed, it is in your best interest to obtain and keep all receipts. This written warranty gives you specific legal rights. You may also have other rights that vary from state to state. Service under this warranty must be obtained by following these steps, in order:

1. Contact your selling authorized Spirit Fitness dealer. OR
2. Contact your local authorized Spirit Fitness service organization.
3. If there is a question as to where to obtain service, contact our service department at (870) 935-1107.
4. Spirit Fitness' obligation under this warranty is limited to repairing or replacing, at Spirit Fitness' option, the product through one of our authorized service centers. All repairs must be preauthorized by Spirit Fitness. If the product is shipped to a service center freight charges to and from the service center will be the customer's responsibility. For replacement parts shipped while the product is under warranty, the customer will be responsible for shipping and handling charges. For in-home service, the customer will be responsible for a trip charge. There will be an additional trip charge if the customer is located over 100 miles from the nearest service center.
5. The owner is responsible for adequate packaging upon return to Spirit Fitness. Spirit Fitness is not responsible for damages in shipping. Make all freight damage claims with the appropriate freight carrier. DO NOT SHIP ANY UNIT TO OUR FACTORY WITHOUT A RETURN AUTHORIZATION NUMBER. All units arriving without a return authorization number will be refused.
6. For any further information, or to contact our service department by mail, send your correspondence to:

SPIRIT FITNESS, INC.
P.O. Box 2037
Jonesboro, AR 72402-2037

Product features or specifications as described or illustrated are subject to change without notice. All warranties are made by Spirit Manufacturing, Inc. This warranty applies only in the 48 contiguous United States. NOTE: This does not apply to Alaska or Hawaii.

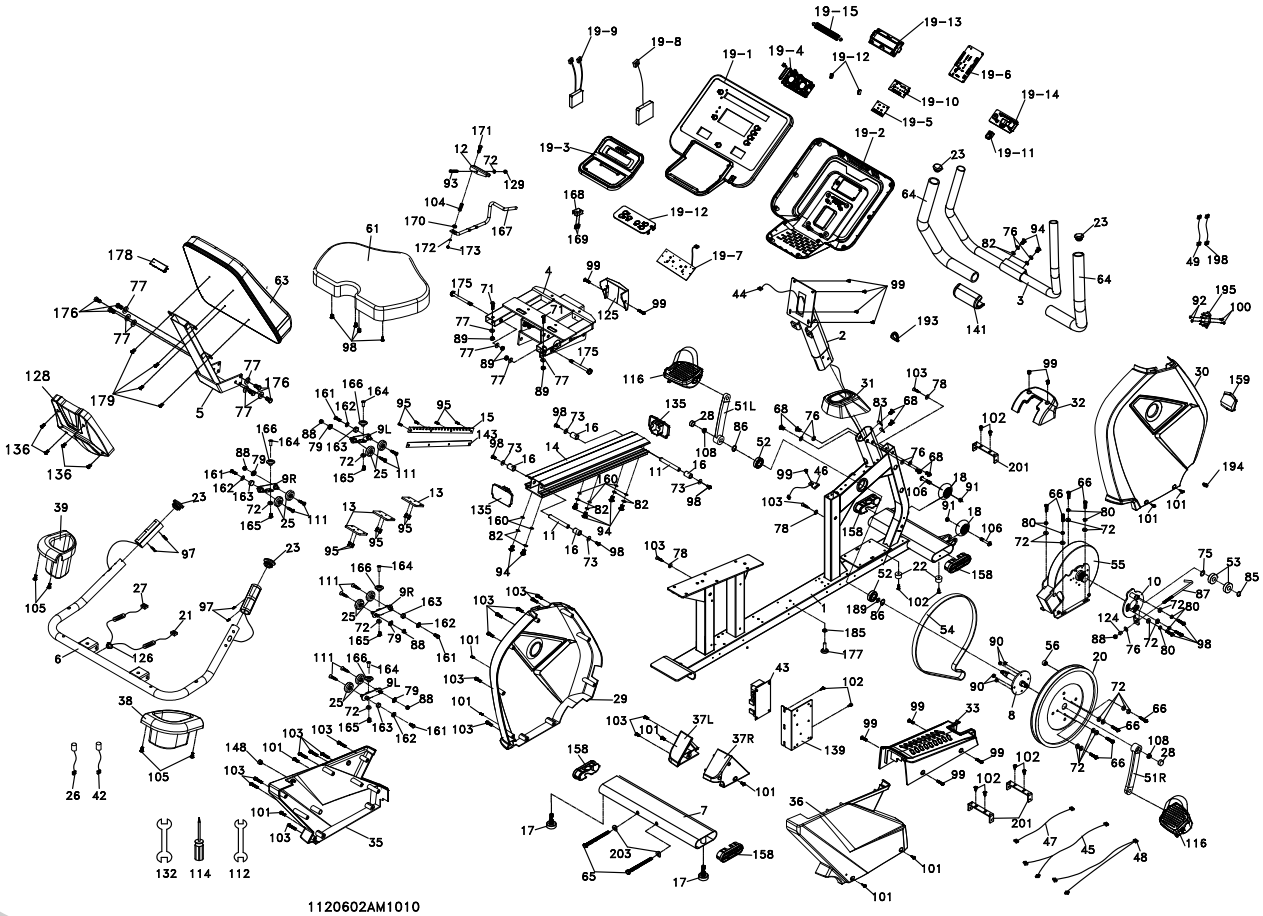
1120602AM1010

CR800-XR880-SB023-01 Part List_SPIRIT		
1	Main Frame	1
2	Console Mast	1
3	Front Handle Bar	1
4	Seat Carriage	1
5	Seat Back Bracket	1
6	Rear Handle Bar	1
7	Rear Stabilizer	1
8	Crank Axle	1
9L	Seat Wheel Adjustment Plate (L)	2
9R	Seat Wheel Adjustment Plate (R)	2
10	Idler Wheel Assembly	1
11	Seat Stop Axle	2
12	Seat Position Latch	1
13	Backing Plate	3
14	Aluminum Track	1
15	Rack	1
16	Spacer for Stopper Axle	4
17	Ø35 × 10m/m_Rubber Foot	2
18	Transportation Wheel	2
19	Console Assembly	1
19-01	Console Top Cover	1
19-02	Console Bottom Cover	1
19-03	Console Inner Cover	1
19-04	500m/m_Fan Assembly	1
19-05	Interface Board	1
19-06	Console Display Board	1
19-07	Main Key Board	1
19-08	W/Receiver, HR	1
19-09	Bluetooth	1
19-10	CASFE Board	1
19-11	USB charging module	1
19-12	Console Key Board	1
19-13	Wind Duct	1
19-14	End Cap	1
19-15	Deflector Fan Grill	1
19-16	Fan Anchor	2
20	Drive Pulley	1

21	950m/m_Handpulse W/Cable Assembly(R)	1
22	Ø25 × Ø25 × 15T_Rubber Foot Pad	2
23	Ø32(1.8T)_Button Head Plug	4
25	Ø38_Seat Track Wheel	8
26	300m/m_Handpulse Wire	1
27	750m/m_Handpulse W/Cable Assembly(L)	1
28	Crank Arm End Cap	2
29	Front Shroud (L)	1
30	Front Shroud (R)	1
31	Console Mast Cover	1
32	Front Stabilizer Cover	1
33	Beam Cover	1
35	Rear Shroud (L)	1
36	Rear Shroud (R)	1
37L	Rear Stabilizer Cover (L)	1
37R	Rear Stabilizer Cover (R)	1
38	Drink Bottle Holder (R)	1
39	Drink Bottle Holder (L)	1
42	300m/m_Handpulse Wire	1
43	Generator/Brake Controller	1
44	Computer Cable	1
45	2200m/m_Handpulse Wire	1
46	1500m/m_Sensor W/Cable	1
47	750m/m_Wire Brake Coil Harness(Red)	1
48	1100m/m_Generator Wire Harness	1
49	80m/m_Connecting Wire (White)	1
51L	Crank Arm(L)	1
51R	Crank Arm(R)	1
52	6004_Bearing	2
53	6203_Bearing	2
54	Drive Belt	1
55	Generator/Brake	1
56	Magnet	1
61	Seat	1
63	Seat Back	1
64	Handgrip Foam	2
65	3/8" × 135m/m_Hex Head Bolt	2
66	1/4" × UNC20 × 3/4"_Hex Head Bolt	8

68	5/16" x UNC18 x 5/8"_Hex Head Bolt	6
71	3/8" x 1-3/4"_Hex Head Bolt	2
72	Ø1/4" x 13 x 1.0T_Flat Washer	20
73	Ø1/4" x 19 x 1.5T_Flat Washer	4
75	Ø17 x Ø23.5 x 1.0T_Flat Washer	1
76	Ø8 x Ø19 x 1.5T_Flat Washer	7
77	Ø3/8" x Ø19 x 1.5T_Flat Washer	10
78	Ø3/16" x Ø15 x 1.5T_Flat Washer	3
79	Ø8 x Ø18 x 3T_Knurled Lock Washer	4
80	Ø1/4"_Split Washer	7
82	Ø5/16" x 1.5T_Split Washer	8
83	Ø5/16" x 19 x 1.5T_Curved Washer	2
85	Ø17_C Ring	1
86	Ø20_C Ring	2
87	M8 x 170m/m_J Bolt	1
88	M8 x 7T_Nylon Nut-Blacking	5
89	3/8" x 7T_Nylon Nut	4
90	1/4" x 8T_Nylon Nut	4
91	5/16" x 6T_Nylon Nut	2
92	M4 x P0.7 x 5T_Nylon Nut	2
93	M6 x 38m/m_Socket Head Cap Bolt (Alloy Steel)	1
94	5/16" x UNC18 x 3/4"_Hex Head Bolt	8
95	M5 x 12m/m_Flat Head Socket Screw	10
97	3 x 20m/m_Tapping Screw	4
98	M6 x 15m/m_Phillips Head Screw	11
99	M5 x 12m/m_Phillips Head Screw	13
100	M4 x 12m/m_Phillips Head Screw	2
101	Ø5 x 16L_Tapping Screw	10
102	5 x 19m/m_Tapping Screw	10
103	3.5 x 16m/m_Sheet Metal Screw	19
104	Spring	1
105	4 x 16m/m_Sheet Metal Screw	4
106	5/16" x UNC18 x 1-3/4"_Button Head Socket Bolt	2
108	M10 x P1.25 x 10T_Nut	2
111	M5 x P0.8 x 10L_Flat Phillips Head Screw	8
112	12/14m/m_Wrench	1
114	Phillips Head Screw Driver	1
116	Pedal	1

124	Ø11.9 x Ø8.5 x 15m/m_Rod End Sleeve	1
125	Seat Carriage Cover	1
126	HGP Wire Grommet	1
128	Seat Back Cover	1
129	M6 x 6T_Nylon Nut	1
132	14/15m/m_Wrench	1
135	Aluminum Axle End Cap	2
136	M5 x 15m/m_Phillips Head Screw	4
139	Plate	1
141	Handle Bar Cover	1
143	Seat Track Fixing Plate	1
148	Block	1
158	End Cap	4
159	Electronic Module	1
160	Ø5/16" x 16 x 1.5T_Flat Washer	6
161	M6 x 10m/m_Flat Phillips Head Screw	4
162	Ø1/4" x Ø16 x 1.0T_Flat Washer	4
163	Sleeve	4
164	M6 x 19L_Nut	4
165	M6 x 10m/m_Button Head Socket Bolt	4
166	PU Wheel	4
167	Seat Front/Aft Adjustment Lever	1
168	Lever Anchor	1
169	M5 x 25m/m_Flat Head Socket Screw	2
170	Ø15 x Ø6 x 4T_Nylon Washer	1
171	M5 x 45m/m_Socket Head Cap Bolt	1
172	Ø5 x Ø10 x 1.0T_Flat Washer	1
173	M5 x 5T_Nylon Nut	1
175	3/8" x 2-3/4"_Hex Head Bolt	2
176	3/8" x UNC16 x 3/4"_Hex Head Bolt	6
177	Rubber Foot Pad	1
178	Square End Cap	1
179	M8 x 15m/m_Button Head Socket Bolt	4
185	3/8" x 4T_Nut	1
189	Rubber Pad	1
193	Round Cap	1
194	TV Adapter (5C2V)	1

195	AC Input Module	1
198	80m/m_Connecting Wire (Black)	1
201	Chain Cover Attaching Plate	3
203	Ø3/8" x 23 x 2.0T_Curved Washer	2

800.258.4555
spiritservice@spiritfitness.com
www.spiritfitness.com

Spirit Fitness
3000 Nestle Road
Jonesboro, AR 72401

SPIRIT COMMERCIAL

CR800 Owners Manual
© 2023 All Rights Reserved
Revision 7: 06.21.2023