Available At IRON COMPANY

SPIRIT
COMMERCIAL

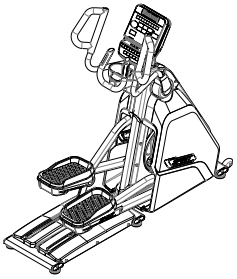

CE900 ELLIPTICAL TRAINER

OWNER'S MANUAL

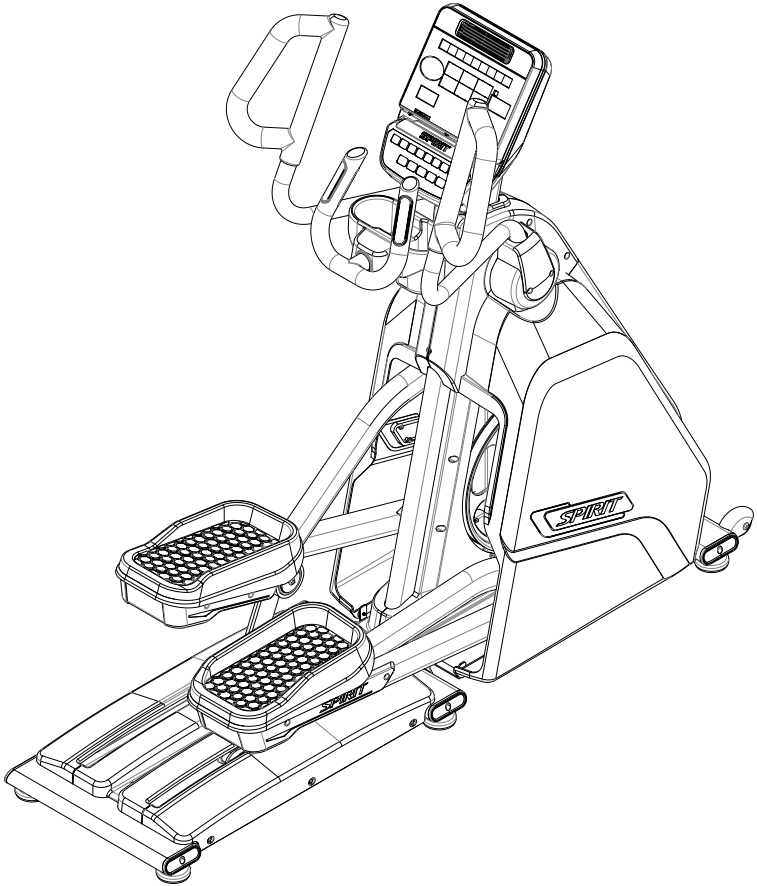
SPIRIT
SPIRIT

TABLE OF CONTENTS

3 IMPORTANT SAFETY INSTRUCTIONS
3 IMPORTANT ELECTRICAL INSTRUCTIONS
4 IMPORTANT OPERATION INSTRUCTIONS
5 PRODUCT REGISTRATION
6 CE900 ASSEMBLY INSTRUCTIONS
11 CONSOLE OPERATION
17 PROGRAMMABLE FEATURES
25 GENERAL MAINTENANCE
27 MANUFACTURER'S LIMITED WARRANTY

Thank you for purchasing our product, please save these instructions. Please do not perform or attempt any customizing, adjustments, repair or maintenance that is not described in this manual.

SPIRIT COMMERCIAL

Congratulations on your new elliptical trainer and welcome to the Spirit Fitness family!

Thank you for your purchase of this quality elliptical trainer from Spirit Fitness. Your new elliptical trainer was manufactured by one of the leading fitness manufacturers in the world and is backed by one of the most comprehensive warranties available. Through your dealer, Spirit Fitness will do all we can to make your ownership experience as pleasant as possible for many years to come. If not purchased direct from Spirit Fitness, the local dealership where you purchased this elliptical trainer is your administrator for all Spirit Fitness warranty and service needs. Their responsibility is to provide you with the technical knowledge and service personnel to make your experience more informed and any difficulties easier to remedy.

Please take a moment at this time to record the name of the dealer, their telephone number, and the date of purchase below to make any future, needed contact easy. We appreciate your support and we will always remember that you are the reason that we are in business.

Yours in Health,
Spirit Fitness

NAME OF DEALER _____

DEALER PHONE # _____

PURCHASE DATE _____

IMPORTANT SAFETY INSTRUCTIONS

⚠WARNING

- Before beginning this or any exercise program, consult a physician. This is especially important for persons over the age of 35 or persons with pre-existing health conditions.
- Keep children away from the elliptical trainer. There are obvious pinch points and other caution areas that can cause harm.
- Keep hands away from all moving parts.
- Never drop or insert any object into any openings.
- Do not use outdoors.
- Do not attempt to use your elliptical trainer for any purpose other than for the purpose it is intended.
- The hand pulse sensors are not medical devices. Various factors, including the user's movement, may affect the accuracy of heart rate readings. The pulse sensors are intended only as exercise aids in determining heart rate trends in general.
- Wear proper shoes. High heels, dress shoes, sandals or bare feet are not suitable for use on your elliptical. Quality athletic shoes are recommended to avoid leg fatigue.
- This appliance is not intended for use by persons with reduced physical, sensory or mental capabilities, or lack of experience and knowledge, unless they have been given supervision or instruction concerning use of the appliance by a person responsible for their safety.
- Keep children under the age of 13 away from this machine.
- Maximum User Weight: 450 lb

SAVE THESE INSTRUCTIONS - THINK SAFETY!

IMPORTANT ELECTRICAL INSTRUCTIONS

⚠WARNING

Be aware that the generator is producing AC power while the elliptical trainer is being used. Do not service the elliptical trainer while the generator is spinning; serious electric shock could occur.

NEVER expose this elliptical trainer to rain or moisture. This product is NOT designed for use outdoors, near a pool or spa, or in any other high

humidity environment. The operating temperature specification is 40 to 120 degrees Fahrenheit, and humidity is 95% non-condensing (no water drops forming on surfaces).

IMPORTANT OPERATION INSTRUCTIONS

- NEVER operate this elliptical trainer without reading and completely understanding the results of any operational change you request from the computer console.
- Understand that changes in resistance do not occur immediately. Set your desired resistance level on the computer console and release the adjustment button. The computer will obey the command gradually.
- Use caution while participating in other activities while pedaling on your elliptical trainer; such as watching television, reading, etc. These distractions may cause you to lose balance which may result in serious injury.
- Do not use excessive pressure on console control buttons. They are precision set to function properly with little finger pressure.

⚠WARNING

This product can expose you to chemicals including Toluene and Acrylamide which are known to the State of California to cause Cancer and birth defects or other reproductive harm. For more information, go to www.P65Warnings.ca.gov

RECORD YOUR SERIAL NUMBER

Please record the serial number of this fitness product in the space provided below. The serial number is located on the front of the elliptical trainer.

SERIAL NUMBER: _____

REGISTER YOUR PURCHASE

The self-addressed product registration card must be completed in full and returned to Spirit Fitness. You can also go to www.spiritfitness.com/warranty under the Support tab to register online.

CE900 PRE-ASSEMBLY

UNPACKING

1. Cut the straps, then along the dotted line on the bottom of the box; lift the box over the unit and unpack.

2. Locate the hardware package. The hardware is separated into four steps. Remove the tools first. Remove the hardware for each step as needed to avoid confusion. The numbers in the instructions that are in parenthesis (#) are the item number from the assembly drawing for reference.

TOOLS INCLUDED:

- ❑ 17mm Wrench (2)
- ❑ Phillips Screwdriver
- ❑ 5mm Allen Wrench
- ❑ 6mm Allen Wrench
- ❑ 8mm Allen Wrench

PARTS INCLUDED:

- ❑ 1 Main Frame
- ❑ 1 Console
- ❑ 1 Console Mast
- ❑ 1 Center Handle Bar
- ❑ 2 Side Handle Bars
- ❑ 1 Handle Bar Bracket
- ❑ 1 Cup Holder
- ❑ 2 Console Mast Covers
- ❑ 2 Console Bracket Covers
- ❑ 1 Hardware Kit
- ❑ 2 Swing Arm Hinge Covers

CE900 STEP ONE

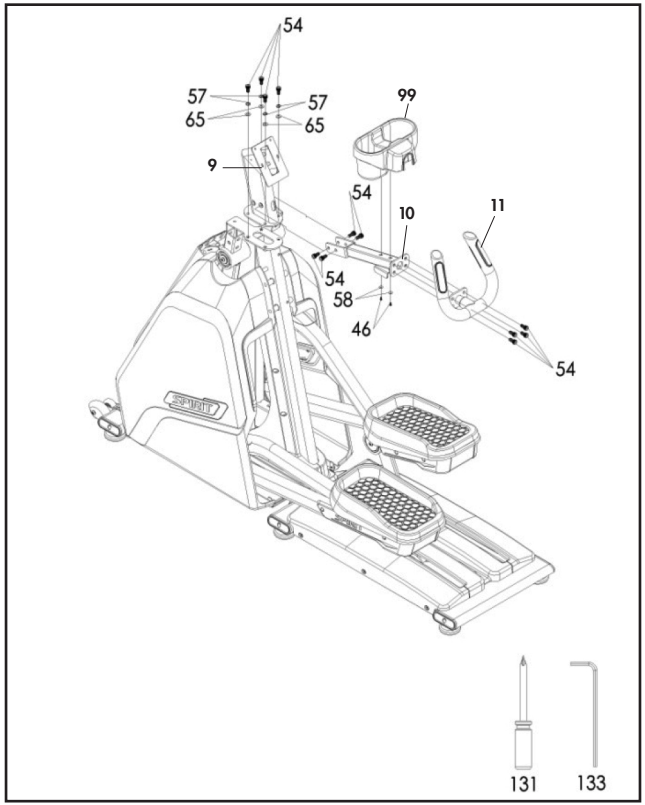

HARDWARE FOR STEP 1			
PART	TYPE	DESCRIPTION	QTY
46	SELF-TAPPING SCREW	3.5X12L	2
54	BOLT	M10Xp1.5X20L	12
57	LOCK WASHER	Ø10XØ16.5X2T	4
58	WASHER	Ø4XØ14X1.0T	2
65	WASHER	Ø10.2XØ19X1.5T	4

1. Unwind wiring harness and run wires up through **CONSOLE MAST (9)**. Bolt **CONSOLE MAST (9)** to **MAIN FRAME (1)** using 4 **BOLTS (54)**, 4 **LOCK WASHERS (57)**, and 4 **WASHERS (65)**. Do not pinch wires.
2. Run wires from **CENTER HANDLEBARS (11)** through **HANDLEBAR BRACKET (10)**, into **CONSOLE MAST (9)** and out the top.
3. Install **CENTER HANDLEBARS (11)** to **HANDLEBAR BRACKET (10)** using 4 **BOLTS (52)**.
4. Install **HANDLEBAR BRACKET (10)** to **CONSOLE MAST (9)** using 4 **BOLTS (54)**.
5. Attach **CUP HOLDER (99)** to **HANDLEBAR BRACKET (10)** using 2 **SELF-TAPPING SCREWS (46)** and **2 WASHERS (58)**.

CE900 STEP TWO

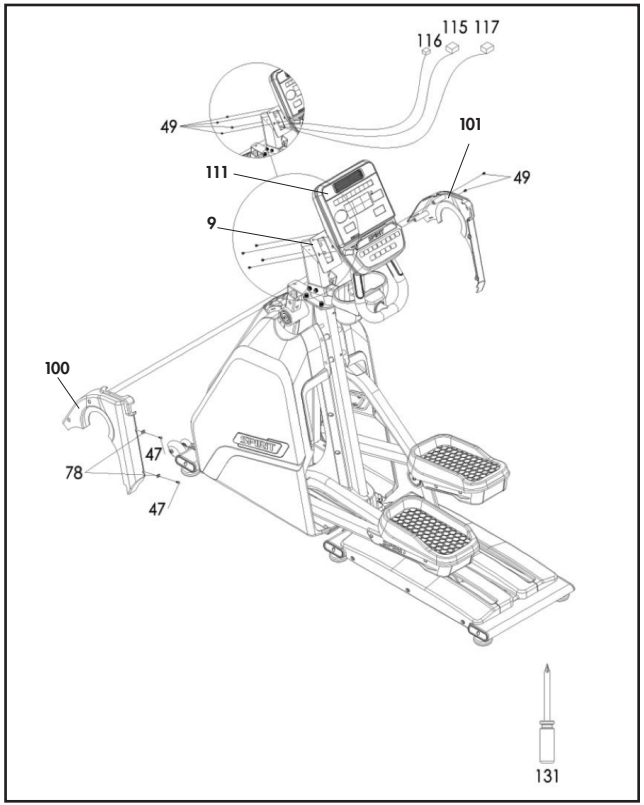

HARDWARE FOR STEP 2			
PART	TYPE	DESCRIPTION	QTY
47	SELF-TAPPING SCREW	5X16L	2
49	SCREW	M5X12L	6
78	U-NUT	M5	2

1. Install 2 **U-NUTS (78)** to **LEFT CONSOLE MAST COVER (100)**.
2. Attach **CONSOLE MAST COVERS (100 & 101)** to **MAIN FRAME (1)** using 2 **SELF-TAPPING SCREWS (47)**. Use 2 **SCREWS (49)** to connect covers to each other.
3. Plug in all wires from wiring harness to **CONSOLE (111)**.
4. Install **CONSOLE (111)** to **CONSOLE MAST (9)** using 4 **SCREWS (49)**. Be careful not to pinch any wires.

CE900 STEP THREE

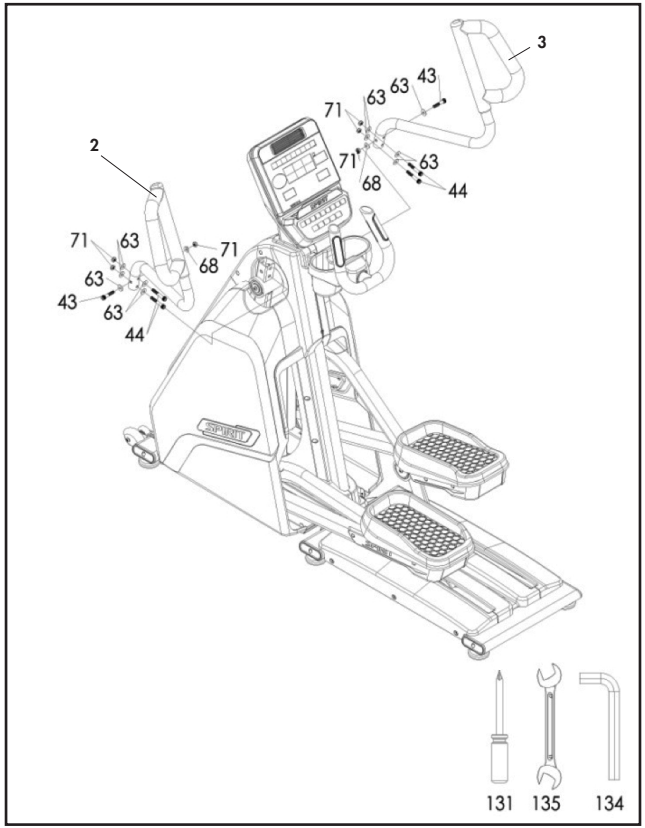

HARDWARE FOR STEP 3			
PART	TYPE	DESCRIPTION	QTY
43	BOLT	M10X55L	2
44	BOLT	M10X60	4
63	WASHER	Ø10X25X1.5T	10
68	CURVED WASHER	Ø10XØ23X1.5T	2
71	NUT	M10X8T	6

1. Install **LEFT SIDE HANDLEBAR (2)** to **SWING ARM (12)**.

   a) First install 2 longer **BOLTS (44)** with a **WASHER (63)** on both sides of **SWING ARM (12)** and a **NUT (71)**. Do not tighten yet.

   b) Then install 1 **SHORTER BOLT (43)** with a **WASHER (63)** through the **SWING ARM (12)** and **CROSSTRAINING HANDLEBAR (2)**, using a **CURVED WASHER (68)** and a **NUT (71)** on the back side.

   c) Tighten after all hardware is installed.

2. Repeat process for **RIGHT SIDE HANDLEBAR (3)**.

CE900 STEP FOUR

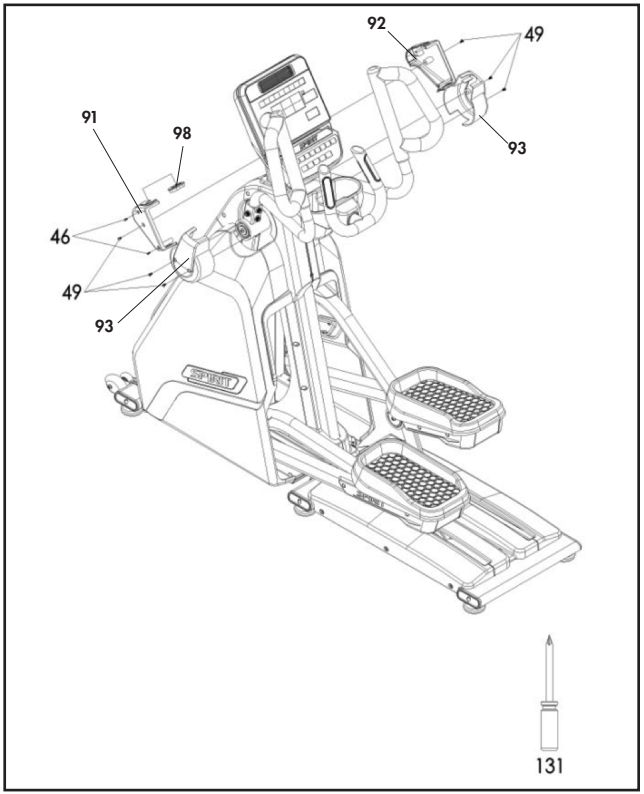

HARDWARE FOR STEP 4			
PART	TYPE	DESCRIPTION	QTY
46	SELF-TAPPING SCREW	3.5X12L	2
49	SCREW	M5X12L	6

1. Attach **CONSOLE BRACKET COVERS (91 & 92)** to **CONSOLE MAST (9)** using 2 **SCREWS (49)**. Connect covers together using 2 **SELF-TAPPING SCREWS (46)**.
2. Attach left **SWING ARM HINGE COVER (93)** to **SWING ARM (12)** using 2 **SCREWS (49)**. Repeat for right side.

SPIRIT COMMERCIAL

CE900 CONSOLE OPERATION

Integrated adjustable fan for workout comfort
Premium, ultra-bright blue LED display
Easy to read lap counter
LED heart rate graph
Large LED matrix window to track workout progress
Tablet friendly reading rack holder
WATTS
TIME ELAPSED
CALORIES
DISTANCE
SCAN
4.1
3:42
480
2421
METS
TIME REMAINING
CALORIES/HOUR
STRIDES
41
LAPS
HR%
152
HEART RATE
58
STRIDES/MIN
1
2
3
4
5
6
7
8
9
CLEAR
0
ENTER
8
LEVEL
WARNING Risk of personal injury – Keep children under the age of 13 away from machine.
AVERTISSEMENT - Risque de blessures- gardez les enfants âgés de moins de 13 ans loin de l'appareil.
SPIRIT
MANUAL
HILL
FAT BURN
HEART RATE
HIIT
CARDIO
INTERVAL
WATTS
STRENGTH
ENTER
START
STOP

POWER

Spirit Fitness commercial elliptical trainers have a built-in generator for power and do not need to be plugged into an AC outlet. To power up the elliptical trainer simply start to pedal, the console will turn on automatically.

When initially powered on, the console will perform an internal self-test. During this time the display may not light up for a few seconds. Continue pedaling and the display will light up. Once powered on, the **Message Window** will be scrolling the start-up message. You may now begin your workout program.

C-SAFE FEATURE

Your console is equipped with a C-SAFE feature. The Power (POWER) port can be used for powering a remote controlled audio-visual system by connecting a cable from the remote to the Power port at the back of the console. The Communication port (COMM) can be used to interact with fitness software applications.

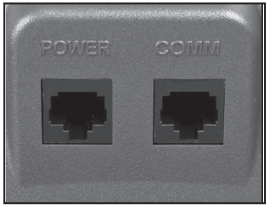

QUICK START

This is the quickest way to start a workout. After the console powers up you just press the **Start** button to begin. This will initiate the **Quick Start** mode. In Quick Start the Time will count up from zero, all workout data will start to accrue and the workload may be adjusted manually by pressing the **Up** and **Down** buttons. The dot matrix display will show just the bottom row lit. As you increase the workload more rows will light indicating a harder workout. The elliptical trainer will get harder to pedal as the rows increase. The dot matrix has 24 columns of lights and each column represents 1 minute. At the end of the 24th column (or 24 minutes of work) the display will wrap around and start at the first column again.

There are 40 levels of resistance – displayed as 10 rows of lights – available for plenty of variety. The first 10 levels are very easy workloads, and the changes between levels are set to a good progression for de-conditioned users. Levels 10-20 are more challenging but the increases from one level to the next remain small. Levels 20-30 start getting tough as the levels jump more dramatically. Levels 30-40 are extremely hard and are good for short interval peaks and elite athletic training.

BASIC INFORMATION

The **Dot Matrix**, or **Profile Window**, will display the workout **Profile**. The **Message** window displays pertinent exercise data. There is a **Strides Per Minute** window for pedal speed and a Level window indicating machine resistance. A **Heart Rate** data window and bar graph show how hard you are working and a lap counter provides distance information.

The **Message Window** will initially be displaying **Watts, Time Elapsed, Calories** and **Distance** information. On the left of the **Message Window** is a button labeled **Scan**. When the Scan button is pressed the next set of information will appear: **METs, Time Remaining, Calories/Hour** and **Strides**

(total stride count). Pressing the **Scan** button, the **Scan** mode is activated and the **Message Window** will show each set of data for four seconds then switch to the next set of data in a continuous loop. Pressing the **Scan** button again will bring you back to the beginning.

To the right of the **Profile Window** is a **Heart Icon, Heart Rate number display** and a **Bar Graph**. The elliptical trainer has a built-in heart rate monitoring system. Simply grasping the hand pulse sensors, or wearing a heart rate chest belt transmitter, will start the **Heart Icon** blinking (this may take a few seconds). The **Heart Rate window** will display your heart rate, or **Pulse**, in beats per minute. The **Bar Graph** represents the percentage of your maximum heart rate you are currently achieving.

NOTE: You must enter your age during program setup for the Bar Graph to be accurate..

The **Stop button** button actually has several functions. Pressing the **Stop button** once during a program will pause the program for 5 minutes (when you stop pedaling without AC power the display will turn off but the memory will be saved for 5 minutes just like the pause mode). If you need to get a drink, answer the phone, or any of the many things that could interrupt your workout, this is a great feature. To resume your workout during **Pause** just press the **Start** button or start pedaling. If the **Stop button** is pressed twice during a workout, the program will end and the console will return to the start-up screen. If the **Stop button** button is held down for 3 seconds, the console will perform a complete Reset. During data entry for a program the **Stop button** performs a **Previous Screen** function. This allows you to go back one step in the programming each time you press the **Stop button** button.

The **Program Buttons** are used to preview each program. When you first turn the console on, you may press each program button to preview what the program profile looks like. If you decide that you want to try a program, press the corresponding program button and then press the **Enter button** to select the program and enter into the data set-up mode.

NUMBER KEY PAD

When you are in the data set-up mode setting new data such as age, weight etc., you can use these buttons to enter the numbers quickly.

The console includes a built-in fan to help keep you cool. To turn the fan on, press the button on the upper right side of the console. This is a 3-speed fan and each time you press the button the airflow will increase accordingly. After the third setting the fan will turn off when the button is pressed again.

PROGRAMMING THE CONSOLE

Each of the programs can be customized with your personal information and changed to suit your needs. Some of the information asked for is necessary to ensure the readouts are correct. You will be asked for your **Age** and **Weight**. Entering your **Age** ensures that the **Heart Rate bar graph** shows the correct number. Your **Age** is also necessary during the **Heart Rate control program** to ensure the correct settings are in the program for your **Age**. Otherwise the work settings could be too high or low for you; entering your **Weight** aides in calculating a more correct **Calorie** reading. Although we cannot provide an exact calorie count we do want to be as close as possible.

CALORIE NOTE: Calorie readings on every piece of exercise equipment, whether it is in a gym or at home, are not accurate and tend to vary widely. They are meant only as a guide to monitor your progress from workout to workout. The only way to measure your calorie burn accurately is in a clinical setting connected to a host of machines. This is because every person is different and burns calories at a different rate. Some good news is that you will continue to burn calories at an accelerated rate for at least an hour after you have finished exercising!

ENTERING A PROGRAM & CHANGING SETTINGS

When you enter a program (by pressing a program button then **Enter button**) you have the option of entering your own personal settings. If you want to work out without entering new settings, then just press the **Start button**. This will bypass the programming of data and take you directly to the start of your workout. If you want to change the personal settings, then just follow the instructions in the **Message Window**. If you start a program without changing the settings, the default, or pre-saved settings will be used.

MANUAL

The **Manual** program works as the name implies, manually. This means that you control the workload yourself and not the computer. To start the **Manual** program, follow the instructions below or just press the **Manual button** then the **Enter button** and follow the directions in the **Message Window**.

1. Press the **Manual** button then press the **Enter** button.
2. The **Message Window** will ask you to enter your **Age**. You may enter your Age, using the **Up** and **Down buttons** or the numeric button pad, then press the **Enter button** to accept the new number and proceed on to the next screen.
3. You are now asked to enter your **Weight**. You may adjust the **Weight** number using the **Up** and **Down buttons**, or the numeric button pad, then press enter to continue.
4. The next setting is **Time**. You may adjust the **Time** and press enter to continue.
5. Now you are finished editing the settings and can begin your workout by pressing the **Start button**. You can also go back and modify your settings by pressing the **Enter button.** *NOTE: At any time during the editing of data you can press the Stop button to go back one level, or screen.*
6. The program automatically starts you at level one. This is the easiest level and it is a good idea to stay at level one for a while to warm up. If you want to increase the work load at any time press the **Up button**; the **Down button** will decrease the workload.
7. When the program ends you may press **Start** to begin the same program again or **Stop** to exit the program.

PRESET PROGRAMS

The elliptical trainer has five different programs that have been designed for a variety of workouts. These five programs have factory preset work level profiles for achieving different goals.

HILL

This program follows a triangle or pyramid type of gradual progression from approximately 10% of maximum effort (the level that you chose before starting this program) up to a maximum effort which lasts for 10% of the total workout time, then a gradual regression of resistance back to approximately 10% of maximum effort.

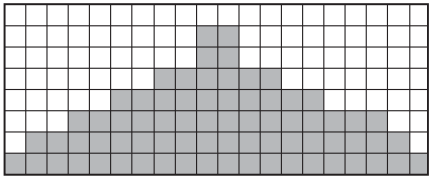

FAT BURN

This program follows a quick progression up to the maximum resistance level (default or user input level) that is sustained for 2/3 of the workout. This program will challenge your ability to sustain your energy output for an extended period of time.

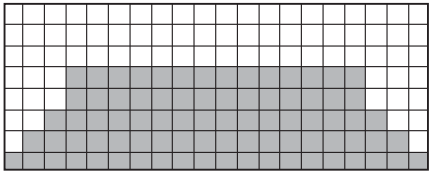

CARDIO

This program presents a quick progression up to near maximum resistance level (default or user input level). It has slight fluctuations up and down to allow your heart rate to elevate, and then recover repeatedly, before beginning a quick cool down. This will build up your heart muscle and increase blood flow and lung capacity.

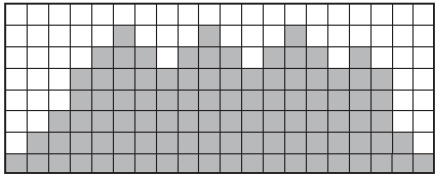

STRENGTH

This program has a gradual progression of resistance up to 100% of maximum effort that is sustained for 25% of workout duration. This will help build strength and muscular endurance in the lower body and glutes. A brief cool down follows.

INTERVAL

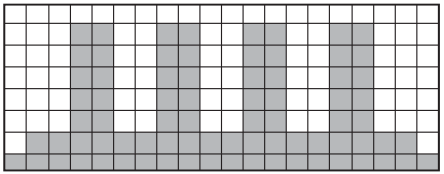

This program takes you through high levels of intensity followed by recovery periods of low intensity. This program utilizes and develops your "Fast Twitch" muscle fibers which are used when performing tasks that are intense and short in duration. These deplete your oxygen level and spike your heart rate, followed by periods of recovery and heart rate drop to replenish oxygen. Your cardiovascular system gets programmed to use oxygen more efficiently.

PROGRAMMING PRESET PROGRAMS

1. Select the desired program button then press the **Enter button**.
2. The **Message Window** will ask you to enter your **Age**. You may adjust the age setting, using the **Up** and **Down buttons**,then press the **Enter** button to accept the new number and proceed on to the next screen.
3. You are now asked to enter your **Weigh**t. You may adjust the weight number using the **Up and Down buttons**, then press **Enter** to continue.
4. Next is **Time**. You may adjust the **Time** and press **Enter** to continue.
5. Now you are asked to adjust the **Max Level**. This is the peak exertion level you will experience during the program (at the top of the hill). Adjust the level and then press **Enter**.
6. Now you are finished editing the settings and can begin your workout by pressing the **Start button**. You can also go back and modify your settings by pressing the Stop button to go back one level, or screen.

7. If you want to increase or decrease the workload at any time during the program press the **Up** or **Down button**. This will change the workload settings of the entire profile, although the profile picture on the screen will not change. The reason for this is so that you can see the entire profile at all times. If the profile picture is changed it will look distorted and not a true representation of the actual profile. When you make a change to the workload, the **Message Window** will show both the current column and program maximum levels of work.
8. During the program you will be able to scroll through the data in the **Message Window** by pressing the **Scan button** next to the **Message Window**.
9. When the program ends the **Message Window** and data windows will show a summary of your workout. The summary will be displayed for a short time then the console will return to the start-up display.

HIIT PROGRAM

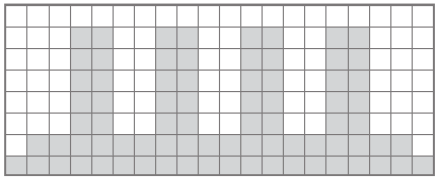

The HIIT, or High Intensity Interval Training, program takes advantage of the latest trend in fitness. During the program you will perform short bursts of high intensity sprinting followed by short rest periods. HIIT is a fully customizable interval training program. You can enter the number of intervals, time of each interval Sprint and Rest periods and the work intensity of the levels.

1. Press the **HIIT button** then **Enter**. The **Message Window** will ask you to enter your **Age**. You may enter your **Age**, using the **Up** and **Down buttons** or the numeric button pad, then press the **Enter button** to accept the new number and proceed on to the next screen.
2. You are now asked to enter your **Weight**. You may adjust the **Weight** number using the **Up** and **Down buttons** or the numeric button pad then press enter to continue.
3. Next you are asked for the number of intervals you want to do. The default is 10 and the range available is 3 to 15. One interval equals 1 **Sprint** and 1 **Rest** segment.
4. Now you are asked to adjust the **Sprint Level**. This is the resistance level you will experience during the **Sprint segments** of the program. Adjust the level and then press **Enter**.

5. Now you are asked to adjust the **Rest Level**. This is the resistance level you will experience during the Rest segments of the program. Adjust the level and then press **Enter**.
6. Next is entering the **Interval time**. The **Message window** shows: Sprint :30 | Rest :30. The **Sprint time** will be blinking. You may use the + - buttons to adjust the **Sprint time** from 20 to 60 seconds then press **Enter**. The time for the **Rest period** will blink and you can adjust the time using the +- buttons and press **Enter**.
7. The **Message window** will now display the total time for the HIIT workout; now press **Start** to begin. There is a 3-minute warm-up period before the first **Sprint** begins. The resistance level during warm-up is set to 5 but can be adjusted manually.
8. The dot matrix display in the HIIT program is a speed indication display, not a power or resistance display. During the **Sprint** the dot matrix display will show a blinking LED at the first Sprint segment. That is the target speed LED and indicates 90 pedal rpm. As you pedal faster the lights below the target speed LED light up the faster you go. When you exceed 90 rpm the target LED will move up showing you are past the target speed. You should maintain at least 90 rpm throughout the Sprint segments. The rest segments of the HIIT program are set to resistance level 5 and you can pedal at any speed you choose as your heart rate recovers. You can manually adjust the resistance levels during the Sprint and Rest segments.
9. At the end of the last **Sprint** there is a 3-minute cool-down period. You can bypass this by pressing the **Stop button** and the workout summary will be displayed.

HEART RATE PROGRAM OPERATION

To start the HR program, follow the instructions below or just press the HR button then the **Enter button** and follow the directions in the **Message Window**.

1. Press the **HR button** then press the **Enter button**.
2. The message window will ask you to enter your **Age**. You may enter your **Age**, using the **Up/Down buttons** or the numeric button pad, then press the **Enter button** to accept the new number and proceed on to the next screen.
3. You are now asked to enter your **Weight**. You may adjust the **Weight** number using the **Up/Down buttons** or the numeric button pad, then press **Enter** to continue.
4. Next is **Time**. You may adjust the **Time** and press **Enter** to continue.
5. Now you are asked to adjust your target **Heart Rate**. This is the heart rate level you will try to maintain during the program. Adjust the value and then press **Enter.**
6. Now you are finished editing the settings and can begin your workout by pressing the **Start button**. You can also go back and modify your settings by pressing the **Enter button**. *Note: At any time during the editing of data you can press the Stop button to go back one level, or screen.*
7. If you want to increase or decrease the resistance at any time during the program press the **Up/Down button**. This will allow you to change your target heart rate at any time during the program.
8. The program will automatically increase or decrease the amount of resistance, depending on whether your heart rate is above or below your target.
9. During the HR program you will be able to scroll through the data in the **Message Window** by pressing the adjacent **Display button**.

CONSTANT WATT PROGRAM

The Watts program maintains a constant workload. The resistance Level adjusts when the speed is changed. To start the Constant Watt program, follow the instructions below or just press the Watt button then the Enter button and follow the directions in the Message Window.

1. Press the **Watt** button then press the **Enter** button.
2. The **Message Window** will ask you to enter your **Age**. Input your **Age**, using the **Up/Down buttons** or the numeric button pad, then press the Enter button to accept the new age and proceed on to the next screen.
3. You are now asked to enter your **Weight**. Adjust **Weight** using the **Up/Down** buttons or the numeric button pad, then press **Enter** to continue.
4. Next is **Time**. Adjust the **Time** then press **Enter** to continue.
5. Now you are asked to adjust the **Target Watt Level.** This is the constant power you will experience during the program. Adjust using the **Up/Down** buttons, then press **Enter**.
6. Now you are finished editing the settings and can begin your workout by pressing the **Start button.** You can also go back and modify your settings by pressing the **Enter** button. *NOTE: At any time during the editing of data, you can press the Stop button to go back one level, or screen.*
7. If you want to increase or decrease the workload at any time during the program, press the **Up/Down** button. This will allow you to change your target **Watt level** at any time during the program.
8. During the **Constant Power program** you will be able to scroll through the data in the **Message Window** by pressing the adjacent **Scan** button.
9. When the program ends, you may press **Start** to begin the same program again or **Stop** to exit the program.

GENERAL MAINTENANCE

Wipe down all areas in the sweat path with a damp cloth after each workout. If a squeak, thump, clicking or rough feeling develops the main cause is most likely one of two reasons:

1. The hardware was not sufficiently tightened during assembly. All bolts that were installed during assembly need to be tightened as much as possible. It may be necessary to use a larger wrench than the one provided if you cannot tighten the bolts sufficiently. It is important to note that 90% of calls to the service department for noise issues can be traced to loose hardware.

2. Dirt build-up on the rear rails and polyurethane wheels are also a source of noise. Noise from build-up on the aluminum tracks can cause a thumping sound that you would think is coming from inside the main body of the machine because noise travels, and is amplified, in the tubing of the frame. Clean the tracks and wheels with a lint free cloth and rubbing alcohol. Stubborn build-up can be removed with your thumbnail or a non-metallic scraper, like the back edge of a plastic knife.

If squeaks or other noises persist, check that the unit is properly leveled. There are 6 leveling pads on the bottom of the machine, use a 14mm wrench (or adjustable wrench) to adjust the levelers.

SANITIZING YOUR SPIRIT FITNESS EQUIPMENT

- Unupholstered high-contact surfaces (hard plastics) can be sanitized using a 75% isopropyl alcohol solution and a clean, dry cloth. Spray surfaces to be sanitized, and use the dry cloth to wipe clean. Allow surfaces to dry before using.
- For upholstered or soft-plastic surfaces, use a conditioner after sanitizing. Be sure to follow the instructions provided by the conditioner manufacturer to ensure proper use of the conditioner.
- Alternatively, you can make your own spray by mixing the proper ratio of isopropyl alcohol and distilled water to reach a 75% solution.
- For more details on sanitization, or to learn how to make your own spray solution, please visit https://support.spiritfitness.com/hc/en-us/articles/4406787148564 .

MAINTENANCE MODE MENU

The console has built-in maintenance/diagnostic software. The software will allow you to change the console settings from English to Metric and turn off the beeping of the speaker when a button is pressed for example. To enter the Maintenance Mode, pedal the elliptical and press and hold down the Start, Stop and Enter buttons. Keep holding the buttons down for about 5 seconds and the Message Center will display Maintenance Mode. Press the Enter button to access the menu below:

1. Button Test (Will allow you to test all the buttons to make sure they are functioning)
2. Display Test (Tests all the display functions)
3. Sleep Mode (Turn on to have the console power down automatically after 20 minutes of inactivity)
4. Odometer Reset (Resets the odometer)
5. Units (Sets the display to read out in English or Metric display measurements)
6. Speaker (Turns off the speaker so no beeping sound is heard)
7. Brake Test (Tests the brake resistance)
8. Sensor Test (Tests the speed sensor function)
9. Unit Type (Sets machine type; Bike or Elliptical)

ELLIPTICAL TRAINER WARRANTY EFFECTIVE NOVEMBER 08, 2021

Spirit Fitness warrants this elliptical trainer for a period of time listed below from the date of sale, as determined by sale receipt, or in the absence of a sales receipt eighteen (18) months from the original factory shipping date. Spirit Fitness' responsibilities include providing new or remanufactured parts, at Spirit Fitness' option, and technical support to our independent dealers and servicing organizations. In the absence of a dealer or service organization, these warranties will be administered by Spirit Fitness directly. The warranty period applies to the following components:

WARRANTY	FRAME	GENERATOR BRAKE	PARTS	LABOR
Commercial	Lifetime	5 Years	3 Year	3 Years

*Prisons and correctional facilities are excluded from warranty coverage.

NORMAL RESPONSIBILITIES OF THE FACILITY

The facility is responsible for the items listed below:

1. The warranty registration card must be completed and returned to the address listed on the card within 10 days of the original purchase, or completed online to validate the manufacturer's limited warranty.
2. Proper use of the fitness equipment in accordance with the instructions provided in this manual
3. Proper installation in accordance with instructions provided with the fitness equipment and with all local electric codes.
4. Expenses for making the fitness equipment accessible for servicing, including any item that was not part of the fitness equipment at the time it was shipped from the factory.
5. Damages to the fitness equipment finish during shipping, installation or following installation.
6. Routine maintenance of this unit as specified in this manual.

EXCLUSIONS

This warranty does not cover the following:

1. CONSEQUENTIAL, COLLATERAL, OR INCIDENTAL DAMAGES SUCH AS PROPERTY DAMAGE AND INCIDENTAL EXPENSES RESULTING FROM ANY BREACH OF THIS WRITTEN OR ANY IMPLIED WARRANTY. *NOTE: Some states do not allow the exclusion or limitation of incidental or consequential damages, so this limitation or exclusion may not apply to you.*
2. Service call reimbursement to the facility. Service call reimbursement to the dealer that does not involve malfunction or defects in workmanship or material, for units that are beyond the warranty period, for units that are beyond the service call reimbursement period, for fitness equipment not requiring component replacement, or fitness equipment not in non-dues paying facility or household use.
3. Damages caused by services performed by persons other than authorized Spirit Fitness service companies; use of parts other than original Spirit Fitness parts; or external causes such as corrosion, discoloration of paint or plastic, alterations, modifications, abuse, misuse, accident, improper maintenance, inadequate power supply, or acts of God.
4. Products with original serial numbers that have been removed or altered.
5. Products that have been: sold, transferred, bartered, or given to a third party.
6. Products that do not have a warranty registration card on file at Spirit Fitness. Spirit Fitness reserves the right to request proof of purchase if no warranty record exists for the product.
7. THIS WARRANTY IS EXPRESSLY IN LIEU OF ALL OTHER WARRANTIES EXPRESSED OR IMPLIED, INCLUDING THE WARRANTIES OF MERCHANTABILITY AND/OR FITNESS FOR A PARTICULAR PURPOSE.
8. Product used in prisons and correctional facilities

Warranties outside of the United States may vary. Please contact your local dealer for details.

SERVICE

Keep your bill of sale. Twelve (12) months from the date on the bill of sale or eighteen (18) months from the date of factory shipping as determined by the serial number establishes the labor warranty period should service be required. If service is performed, it is in your best interest to obtain and keep all receipts. This written warranty gives you specific legal rights. You may also have other rights that vary from state to state. Service under this warranty must be obtained by following these steps, in order:

1. Contact your selling authorized Spirit Fitness dealer. OR
2. Contact your local authorized Spirit Fitness service organization.
3. If there is a question as to where to obtain service, contact our service department at (870) 935-1107.
4. Spirit Fitness' obligation under this warranty is limited to repairing or replacing, at Spirit Fitness' option, the product through one of our authorized service centers. All repairs must be preauthorized by Spirit Fitness.
5. The owner is responsible for adequate packaging upon return to Spirit Fitness. Spirit Fitness is not responsible for damages in shipping. Make all freight damage claims with the appropriate freight carrier. DO NOT SHIP ANY UNIT TO OUR FACTORY WITHOUT A RETURN AUTHORIZATION NUMBER. All units arriving without a return authorization number will be refused.
6. For any further information, or to contact our service department by mail, send your correspondence to:

SPIRIT FITNESS, INC.
P.O. Box 2037
Jonesboro, AR 72402-2037

Product features or specifications as described or illustrated are subject to change without notice. All warranties are made by Spirit Manufacturing, Inc. This warranty applies only in the 48 contiguous United States. NOTE: This does not apply to Alaska or Hawaii.

800.258.4555
spiritservice@spiritfitness.com
www.spiritfitness.com

Spirit Fitness
3000 Nestle Road
Jonesboro, AR 72401

SPIRIT COMMERCIAL

CE900 Owners Manual
© 2021 All Rights Reserved
Revision: 11.08.2021