Available at Ironcompany.com®

TKO®
WHATEVER iT TAKES

FUNCTIONAL TRAINER

Model 9050

✚ Owner's Manual

V3.0—06.2012

www.tko.com

THIS PAGE INTENTIONALLY LEFT BLANK

✚ Safety

Read this owner's manual carefully before assembling or using TKO equipment.

WARNING: Serious injury could occur if these safety precautions are not observed

Safety Precautions

- Before beginning any exercise program, consult your personal physician. Evaluate your present fitness level and determine the exercise program that is most appropriate for your particular age and condition.
- If you experience any pain or tightness in your chest, irregular heartbeats, shortness of breath, faintness or other unusual discomfort while exercising, stop and consult your physician before continuing.
- Make sure that the equipment(s) are set up and operated on a solid level surface. DO NOT install or use the equipment on an uneven surface.
- Exercise equipment has moving parts. In the interest of safety, keep others, especially children, at a safe distance while exercising.
- Make sure there are enough room for access and operate the equipment(s) safely.
- Inspect and maintain the equipment(s) regularly.
- Replace the worn or damaged parts / components immediately to ensure safety.
- Use a spotter.
- Back support cushion may drop when knob is pulled. Hold the back support cushion when adjusting it.
- Make sure the pull pin is fully engaged before use.
- Lower the back support cushion to the lowest position when not in use.
- Warm up 5 to 10 minutes before each workout and cool down 5 to 10 minutes afterward. Never hold your breath while exercising.
- Remove all jewelry, including rings, chains and pins before commencing exercise.
- Always wear suitable clothing and footwear during exercise. Do NOT wear loose fitting clothing that could become entangled with the moving parts of your exercise machine.
- Rest adequately between workouts. Muscles tone and develop during these rest periods.
- Most exercise equipment is not recommended for small children. Children should not use the machine unless they are under adult supervision.

If you have any question or need assistance please contact us at,

Customer Service: 866-856-3488 or 713-895-9270
e mail: customerservice@tko.com
Hours: Monday-Friday 8:30am to 4:30pm CT

© Copyright 2011, TKO Sports Group USA Limited. All rights reserved.
TKO Sports Group USA Limited. 4660 Pine Timbers, Suite 198, Houston, TX 77041
Phone + 713-895-9270 Fax + 713-934-8495
www.tko.com

✚ Product Diagram

✚ Exploded Diagram

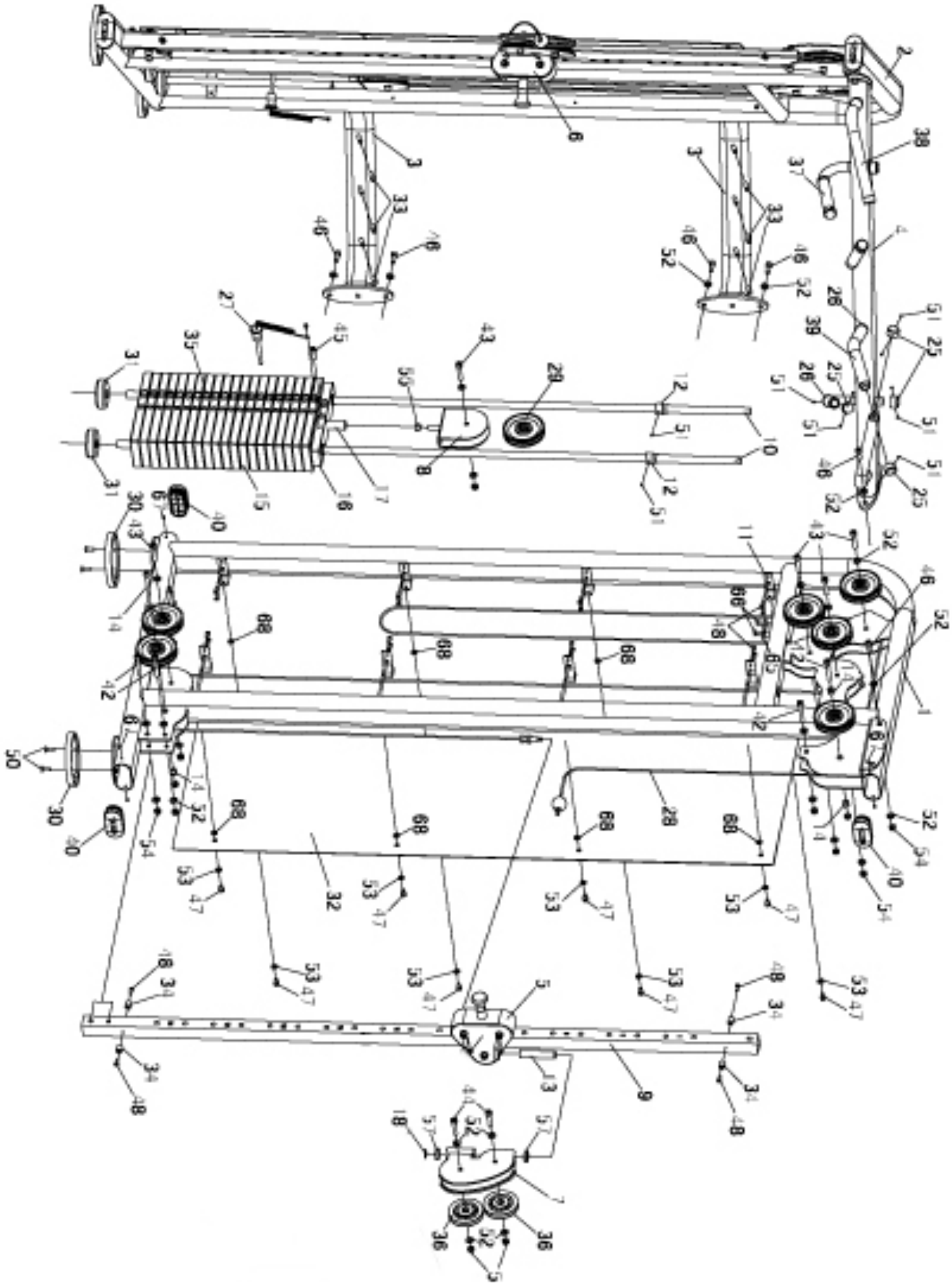

✚ Exploded Diagram (Pulley & Bracket)

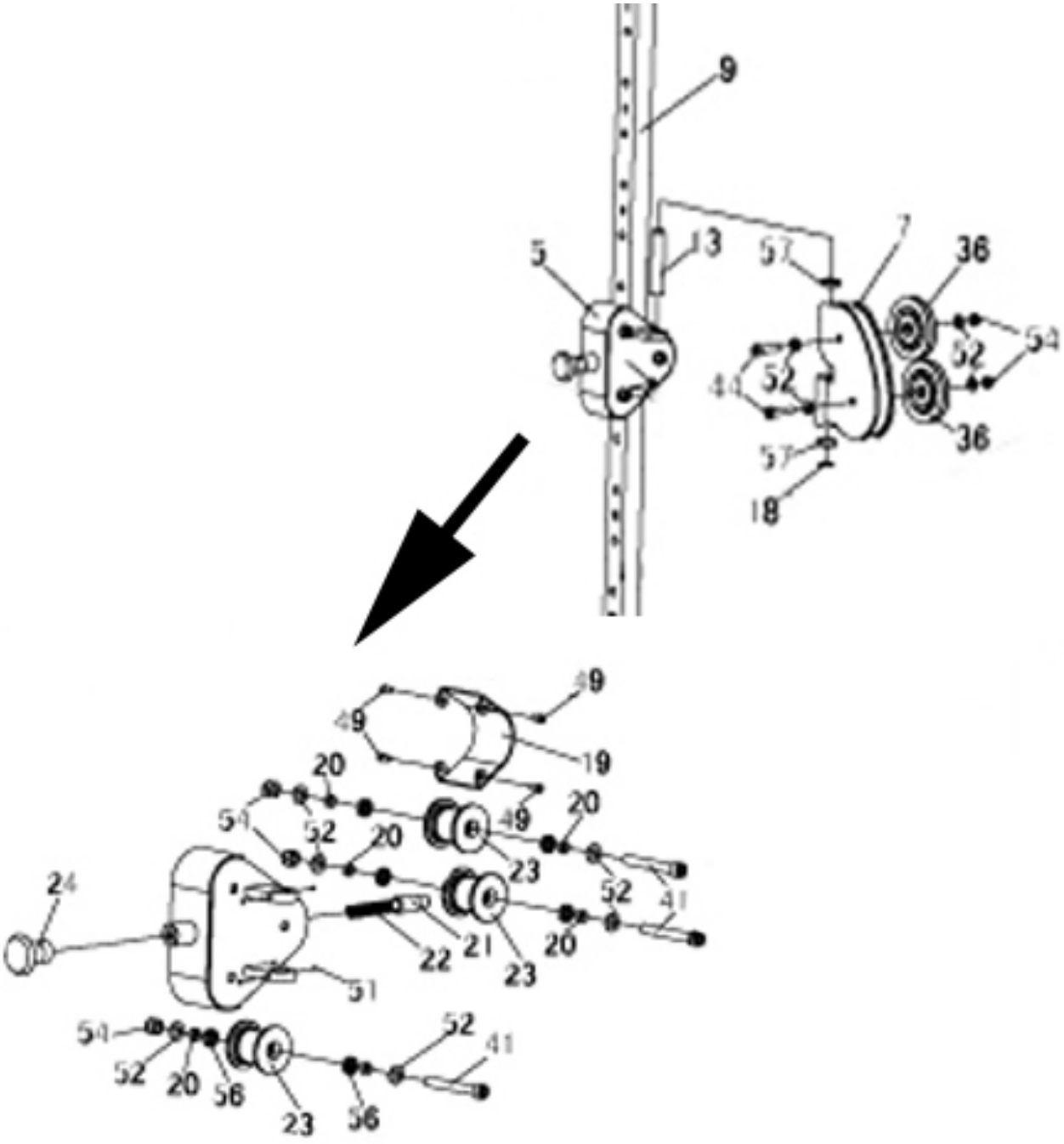

✚ Parts List

NO	Description	Quantities
1	Left Main Frame	1
2	Right Main Frame	1
3	Rear Cross Frame	2
4	Upper Cross Frame	1
5	Left Sliding Bracket	1
6	Right Sliding Bracket	1
7	Front Wheel bracket	2
8	Middle Wheel Bracket	2
9	Adjusting Square Tube	2
10	Guide Rod	4
11	Shroud mounting Brackets	16
12	Bushing for Guide Rod	4
13	Shaft	2
14	Bush For Wheel	8
15	Weight Plate (10 LB each)	40
16	Top Plate	2
17	Selector Rod	2
18	Washer for Ball Bearing	2
19	Sliding Bracket Cover	2
20	Bushing For sliding Wheel	12
21	Pin	2
22	Spring	2
23	Nylon Wheels	6
24	Spring Loaded Lock Pin	2
25	Metal End Cap	8
26	Ring	6
27	Magnetic Weight Pin	2
28	Cable	2
29	Pulley ∅115mm	14
30	Rubber Foot Cap	4

✚ Parts List

NO	Description	Quantities
31	Rubber Bumper	4
32	Shroud	2
33	Plastic Cover for Hooks	6
34	Rubber Bushing	8
35	Number Sticker	2sets
36	Pulley ∅95mm	4
37	Foam Grip 160mm	2
38	Foam Grip 345mm	2
39	Foam Grip 295mm	2
40	Plastic End Cap	6
41	Allen Bolt M10x75mm	6
42	Allen Bolt M10x65mm	10
43	Allen Bolt M10x50mm	10
44	Allen Bolt M10x45mm	4
45	Allen Bolt M10x40mm	2
46	Allen Bolt M10x25mm	12
47	Allen Bolt M8x15mm	16
48	Allen Bolt M6x15mm	40
49	Allen Bolt M5x10mm	10
50	Screw M8x20mm	8
51	Screw M6x4mm	34
52	Flat Washer M10	64
53	Flat Washer M8	16
54	Lock Nut M10	30
55	Nut M12	2
56	Ball Bearing 61800	12
57	Ball Bearing 61804	4
65	Bumper	2
66	Screw M5x10mm	8
67	Screw M6x6mm	12
68	Rubber Washer	16

✚ Accessory Parts List

58

59

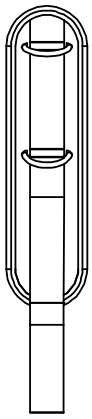
61

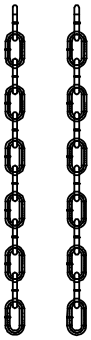
62

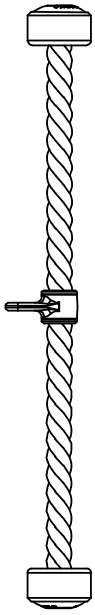
60

64

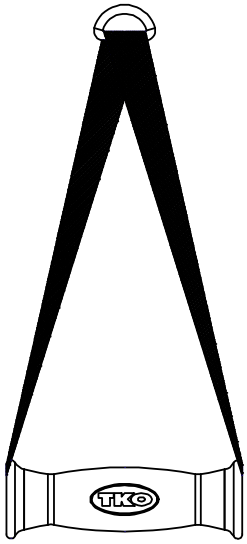
63

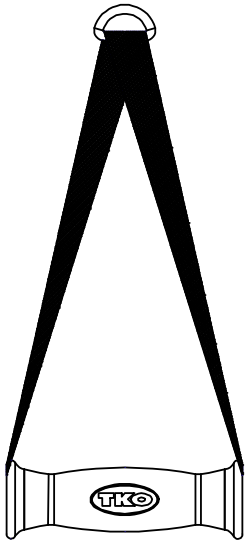
63

58	**Long Bar**	**1**
59	**Short Handle**	**1**
60	**Tricep Rope**	**1**
61	**Ankle Strap**	**1**
62	**Chains**	**2**
63	**Hand Grips**	**2**
64	**Hooks**	**6**

✚ Assembly

Step 1

Attach the Rear Upper & Lower Frame (3) to the Left & Right Main Frame (1 & 2) using 8 Allen Bolts (46) and 8 Flat Washers (52).

Attach the Upper Cross Bar (3) to the Left & Right Main Frame (1 & 2) using 4 Allen Bolts (46) and 4 Flat Washers (52).

Tighten all 12 bolts with wrench (included).

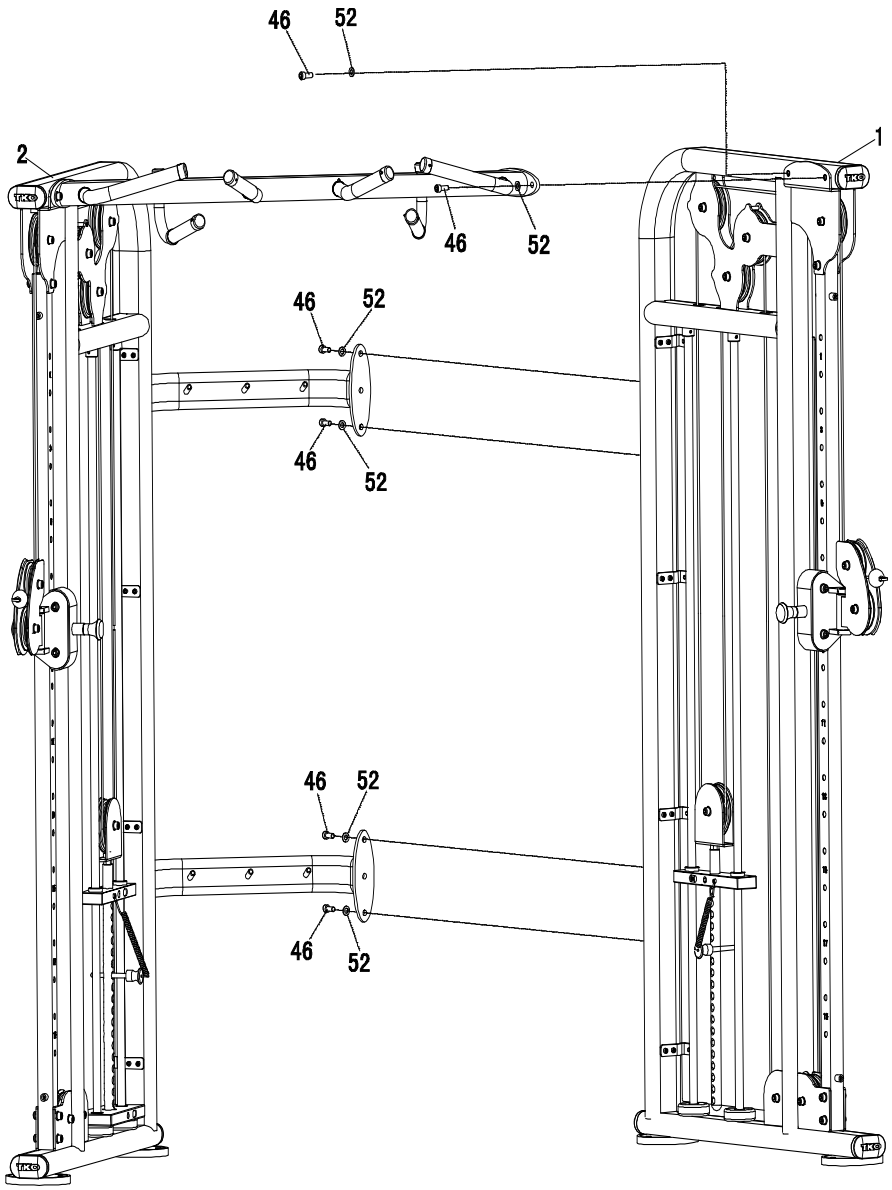

Step 2

Loosen and remove both Guide Rod bushings (12) from the Guide Rods (10). Then remove the Top Plate (16) and the Selector Rod assembly from the Guide Rods.

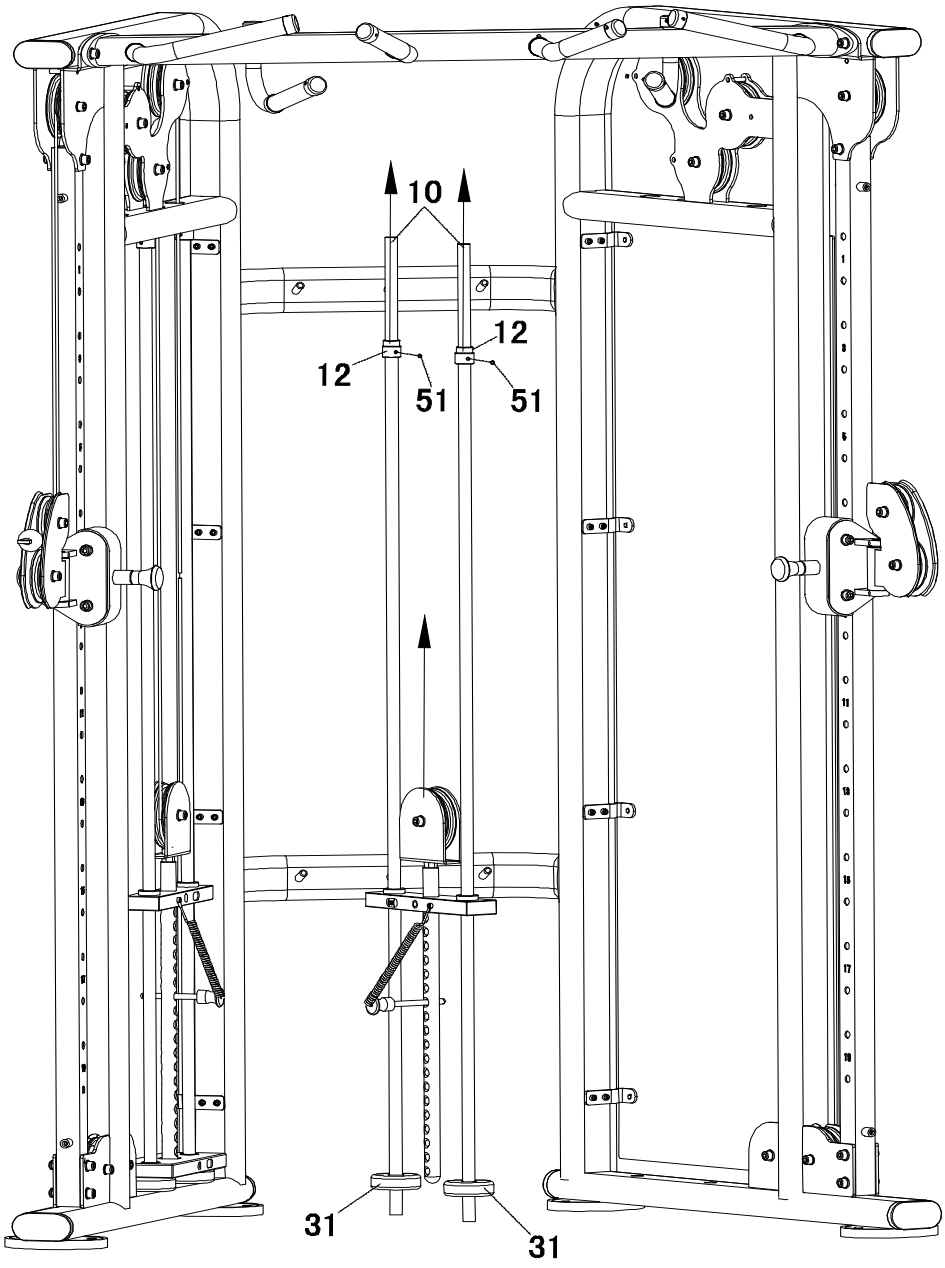

Step 3

Re-insert both Guide Rods (10) into the holes on the bottom of the Main Frame.

Make sure the Rubber Bumpers are at the bottom of the Guide Rods.

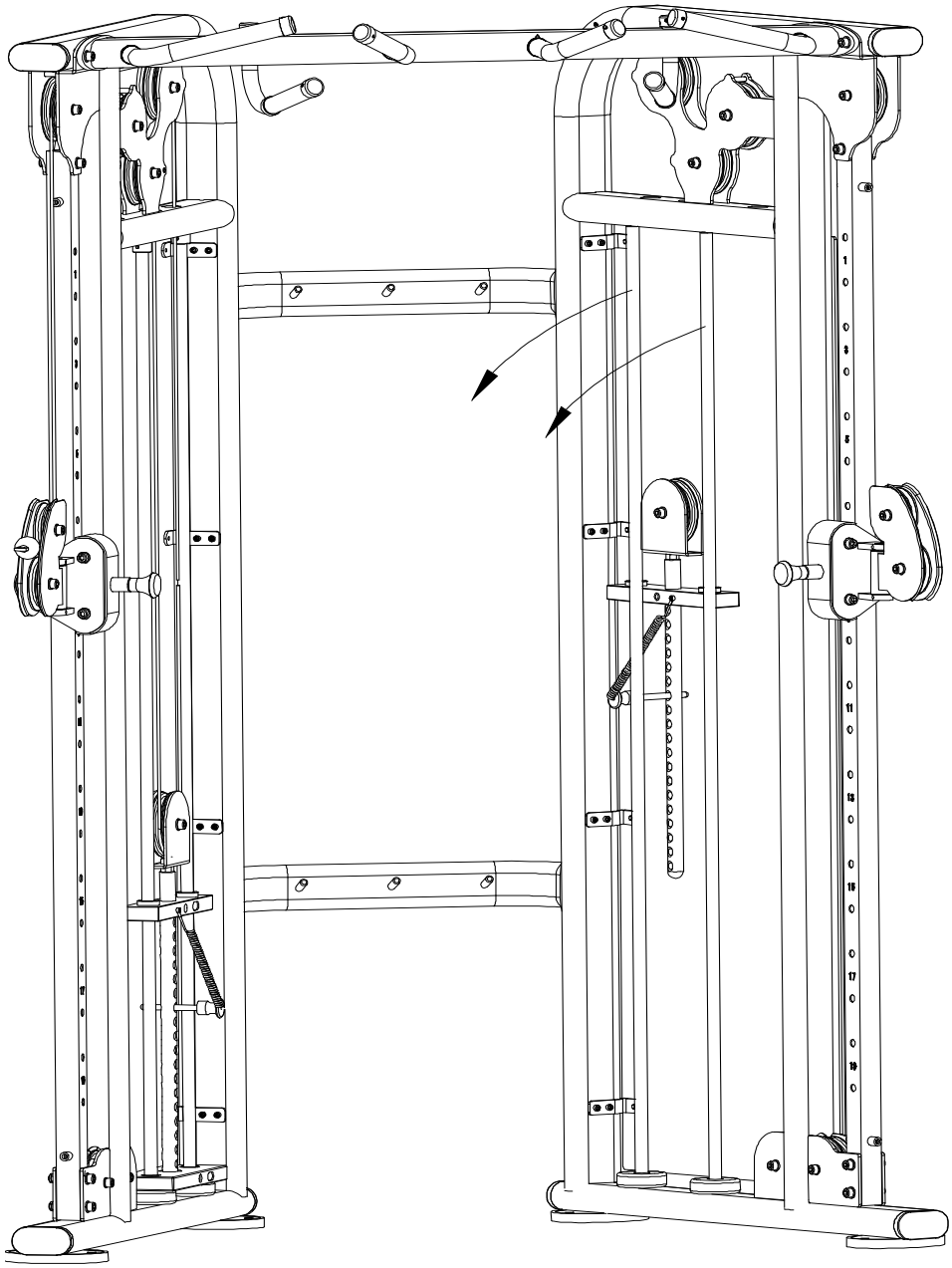

Step 3

Install 20 10LB Plates to each Stack. Re-install the Top Plate Selector Rod Assembly to the top of the Weight Stack.

Make sure the holes in the Weight Plate for the Magnetic Lock Pin are facing inward.

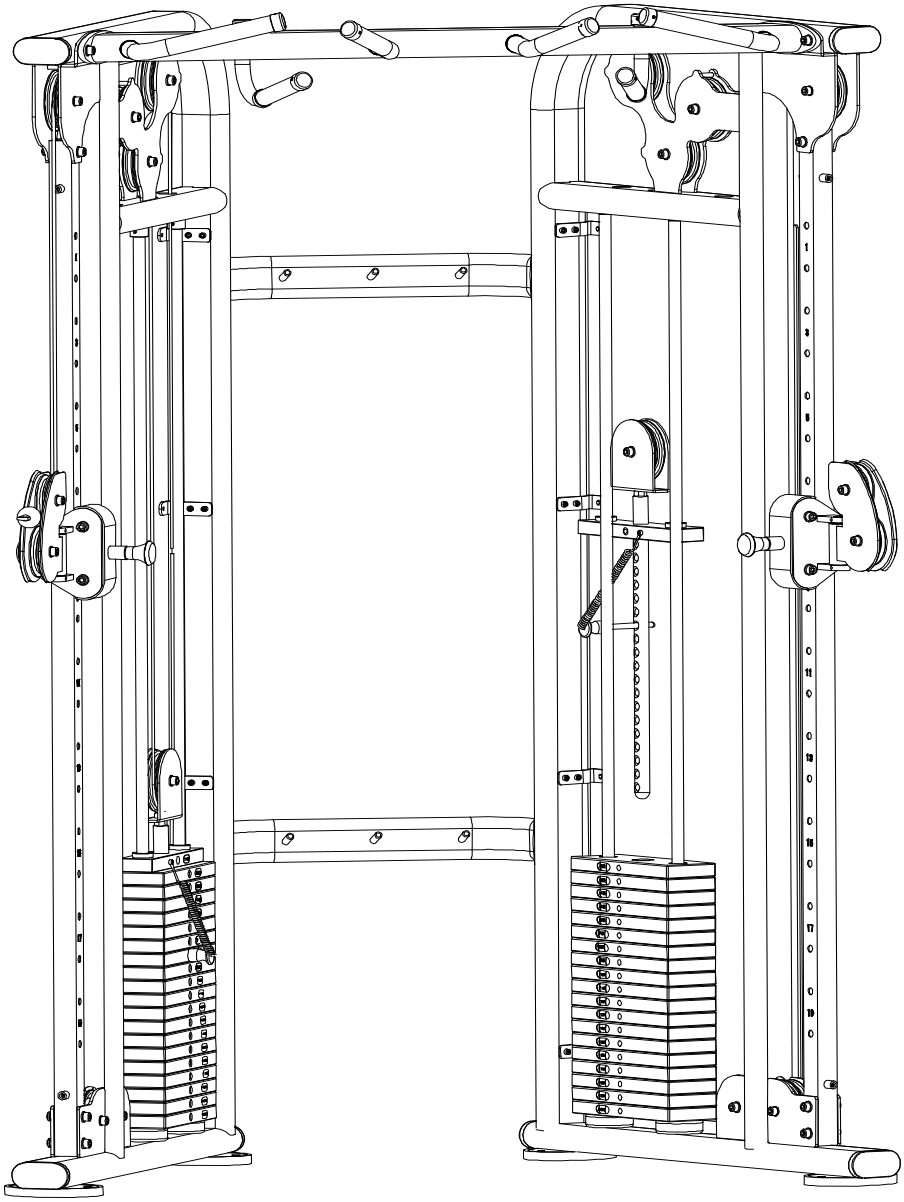

Step 4

Re-install the Guide Rod Bushings (12) that removed in Step 2, then tightening both screws (51) with a wrench.
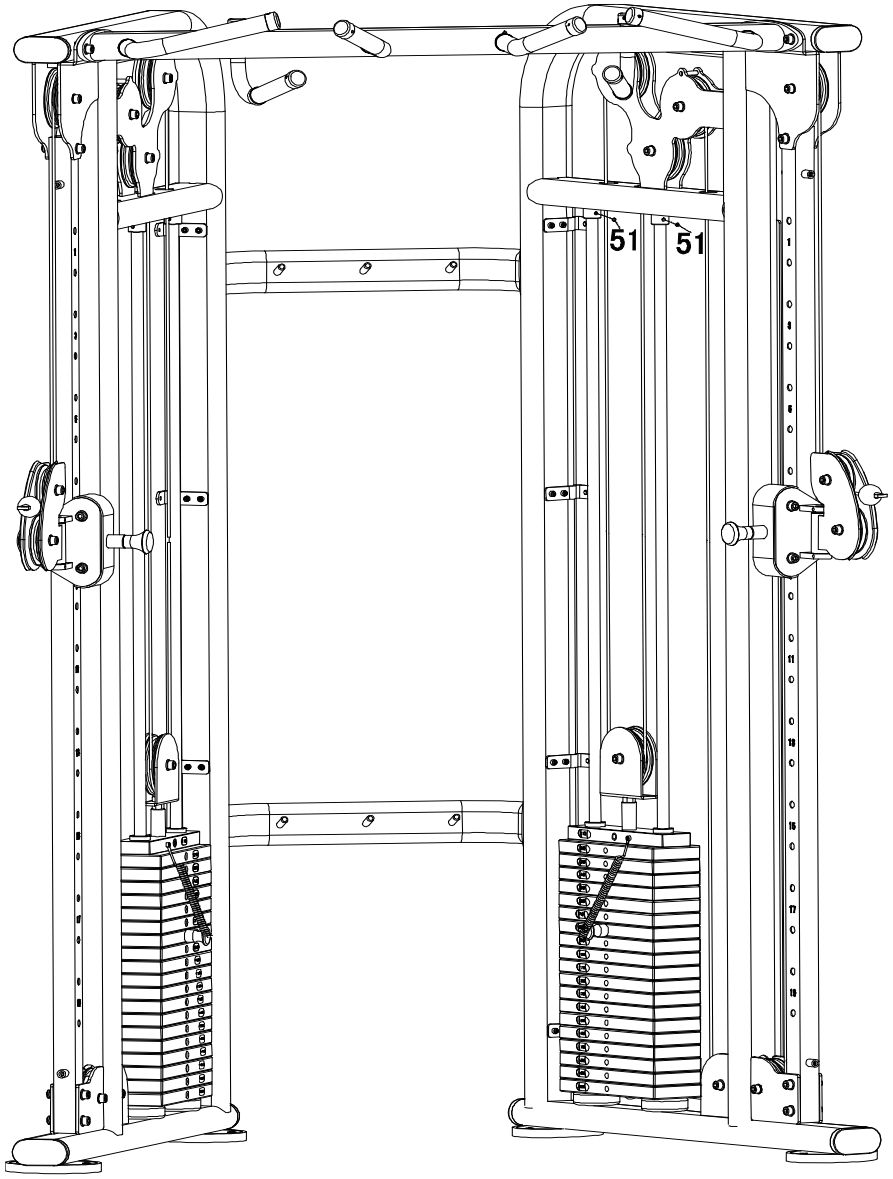
Repeat the same procedure for the other side.